A4VSO Series

Variable Displacement Pump

PIONEER FLURD POWER

Product show and brief introduction

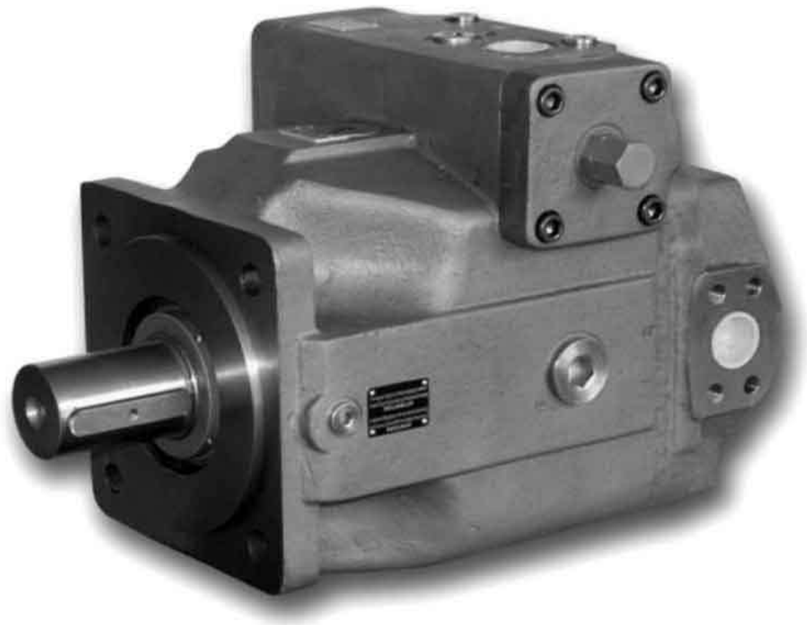

1. Sizes

A4VSO40～1000ml/r , Series 1, 2 and 3,
Nominal pressure 350 bar Peak pressure 420 bar .

2. Characteristic.

- The variable displacement axial piston pump type A4VSO in swashplate desig
- The flow is proportional to the input drive speed and displacement. By adjusting the swashplate it is possible to infinitely vary the flow.
- Infinitely variable displacement.， Slot-controlled swashplate design.
- Good suction characteristics
- Permissible nominal operating pressure 350 bar
- Low noise level,Long service life
- Drive shaft capable of absorbing axial and radial load
- Modular design, Good power/weight ratio
- Short control times
- Through drive and pump combinations possible
- Swash plate angle indicator
- Optional mounting position
- Operation on HF fluids under reduced operational,parameters possible.

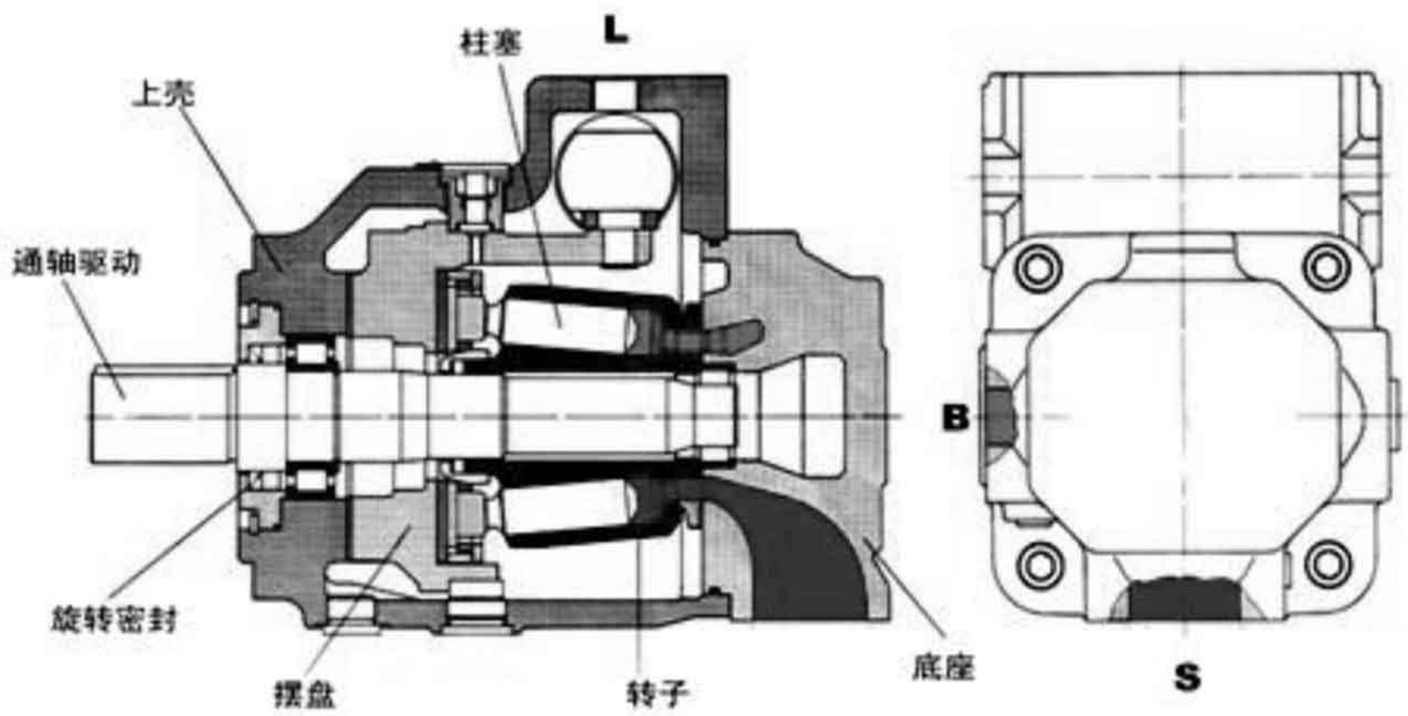

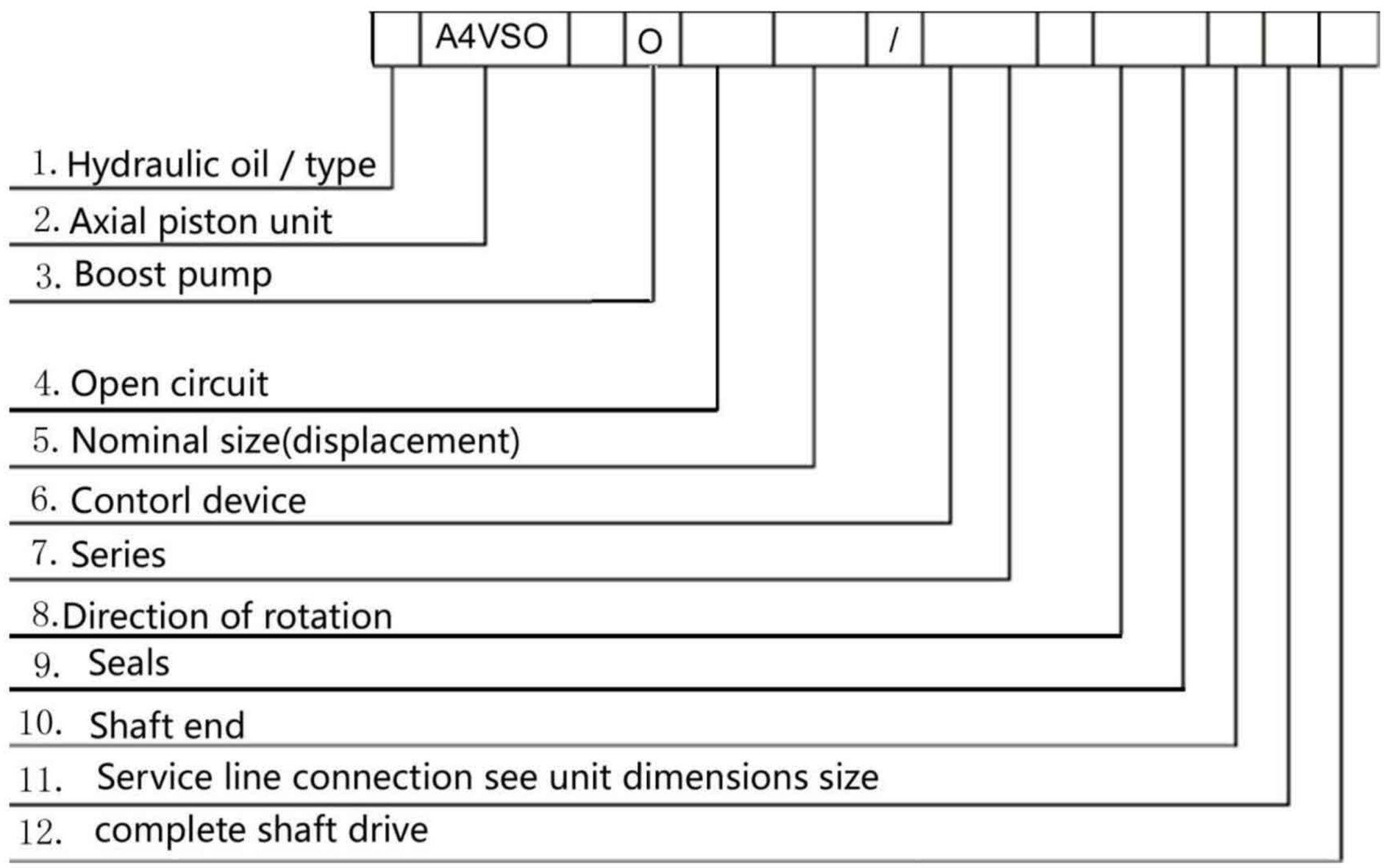

1. Hydraulic fluid / version

Size	40	71	125	180	250	300	355	370	500	
Mineral oil (no code)	√	√	√	√	√	√	√	√	Δ	
HF hydraulic fluid (with the exception of Skydrol)	√	√	√	√	√	√	√	√	Δ	E
High-Speed-Version		▲	▲	▲	√	√	√	√	Δ	H

2. Axial piston unit

Swashplate design, variable, for industrial applications	**A4VS**

3. Boost pump (Impeller)

Size	40	71	125	180	250	300	355	370	500	
Without boost pump	Δ	Δ	Δ	√	√	√	√	Δ	Δ	L

4. Type of operation

Pump, open circuit	O

5. Nominal size

Size	40	71	125	180	250	300	355	370	500	
displacement Vg max (cm)	√	√	√	√	√	√	√	√	Δ	

6. Control device

Size	40	71	125	180	250	300	355	370	500	
Pressure control	√	√	√	√	√	√	√	√	Δ	DR
Flow control	√	√	√	√	√	√	√	√	Δ	FR
Power control with hyperbolic curve	√	√	√	√	√	√	√	√	Δ	LR
Manual control	√	√	√	√	√	√	√	√	Δ	MA
Hydraulic control, and position	√	√	√	√	√	√	√	√	Δ	HW
Hydraulic control, and flow	√	√	√	√	√	√	√	√	Δ	HM
Hydraulic control, with servo / proportional valve	√	√	√	√	√	√	√	√	Δ	HS
Electronic control	√	√	√	√	√	√	√	√	Δ	EO
Hydraulic control, and stress related	√	√	√	√	√	√	√	√	Δ	HD
Speed control, the two control	√	√	√	√	√	√	√	√	Δ	DS

7. Series

Size	40	71	125	180	250	300	355	370	500	
10 Series	√	√	▲	▲	▲	▲	▲	▲	▲	10
20 Series	▲	▲	√	√	√	√	√	√	√	20
30 Series	▲	▲	√	√	√	√	√	√	√	30

8. Direction of rotation

Viewed on shaft end	clockwise	R
	anti- clockwise	L

9. Seals

NBR (DIN ISO 1629)	P
FPM (DIN ISO 1629)	V

10. Shaft end

Keyed parallel shaft DIN 6885	P

Splined shaft DIN 5480	Z

11. Mounting flange

Size	40	71	125	180	250	300	355	370	500	
ISO4孔 ISO 4-hole	√	√	√	√	√	√	√	√	Δ	B
ISO8 孔 ISO 8-hole				√		√	√	√	Δ	H

12. Oil port B & S position

	40	71	125	180	250	300	355	370	500	
Oil port B and S are at the side of SAE, the angle of 90°, with fixed thread	√	√	√	√	√	√	√	√	Δ	13
Secondary pressure oil port B1 is at the opposite of port B. they should be jammed with flanges in supply	√	√	√	√	√	√	√	√	Δ	25

Complete shaft drive

No auxiliary pumps, No complete shaft drive			√	√	√	√	√	√	√	√	Δ	N00
Complete shaft drive can be connected to the piston, the gear pumps or the radial piston pumps												
Flange	shaft sleeve/shaft	connectable										
ISO 125,4– hole	Spline shaft 32x2x30x14x9g	A4VSO/H/G 40	√	√	√	√	√	√	√	√	Δ	K13
ISO 140,4– hole	Spline shaft 40x2x30x18x9g	A4VSO/H/G 71	▲	√	√	√	√	√	√	√	Δ	K33
ISO 160,4– hole	Spline shaft 50x2x30x24x9g	A4VSO/H/G 125	▲	▲	√	√	√	√	√	√	Δ	K34
ISO 160,4– hole	Spline shaft 50x2x30x24x9g	A4VSO/G 180	▲	▲	▲	√	√	√	√	√	Δ	K34
ISO 224,4– hole	Spline shaft 60x2x30x28x9g	A4VSO/H/G 250	▲	▲	▲	▲	√	√	√	√	Δ	K35
ISO 224,4– hole	Spline shaft 70x2x30x22x9g	A4VSO/G 355	▲	▲	▲	▲	▲	▲	√	√	Δ	K77
ISO 315,8– hole	Spline shaft 80x2x30x25x9g	A4VSO/G 500	▲	▲	▲	▲	▲	▲	▲	▲	Δ	K43
ISO 80,2– hole	Spline 3/4" 19–4(SAE A–B)	A10VSO 18	Δ	Δ	√	√	√	Δ	Δ	Δ	Δ	KB2
ISO 100,2– hole	Spline 7/8" 22–4(SAE B)	A10VSO 28	√	√	√	√	√	√	√	√	Δ	KB3
ISO 100,2– hole	Spline 1" 25–4(SAE B–B)	A10VSO 45	▲	Δ	√	√	√	√	Δ	Δ	Δ	KB4
ISO 125,2– hole	Spline1 1/4" 32–4(SAE C)	A10VSO 71	▲	Δ	√	√	√	√	Δ	Δ	Δ	KB5
ISO 125,2– hole	Spline1 1/2" 38–4(SAE C–C)	A10VSO 100	▲	▲	√	√	√	√	Δ	Δ	Δ	KB6
ISO 180,4– hole	Spline1 3/4" 44–4(SAE D)	A10VSO 140	▲	▲	▲	Δ	√	√	√	Δ	Δ	KB7
82–2 (SAE A,2–hole)	Spline5/8" 16–4(SAE A)	G2/GC2/GC3/1X	√	√	√	√	√	√	√	√	Δ	K01
82–2 (SAE A,2–hole)	Spline3/4" 19–4(SAE A–B)	A10VSO 18	√	√	√	√	√	√	√	√	Δ	K52
101–2 (SAE B,2–hole)	Spline7/8" (SAE B)	G3	√	√	√	√	√	√	√	√	Δ	K02
101–2 (SAE B)	Spline 25–4(SAE B–B)	GC4–1X,A10VO 45	▲	▲	√	√	√	√	√	√	Δ	K04
127–2 (SAE C)	Spline32–4(SAE C)	A10VO 71	▲	▲	√	√	√	Δ	Δ	Δ	Δ	K07
101–2 (SAE B)	Spline32–4(SAE C)	GC5–1X	▲	▲	√	√	√	Δ	Δ	Δ	Δ	K06
127–2 (SAE C)	Spline38–4(SAE C–C)	GC6–1X,A10VO 100	▲	▲	√	√	√	Δ	Δ	Δ	Δ	K24
152–4 (SAE D)	Spline44–4(SAE D)	A10VO 140	▲	▲	▲	√	√	Δ	Δ	Δ	Δ	K17
Ø63,metric 4-孔	Shaft with keyØ25	R4	√	√	√	√	√	Δ	Δ	Δ	Δ	K57
101–2(SAE B)	Spline22–4(SAE B)	G4,A10VO 28	√	√	√	√	√	√	√	Δ	Δ	K68
with through,without coupling,without adapter flange,with cover plate for operation			√	√	√	√	√	√	√	√	Δ	K99

Fluid,Mechanical Displacement Limiter

Hydraulic fluid

1. Comments on the selection of the hydraulic fluid

In order to select the correct fluid, it is necessary to know the operating temperature in the tank (open circuit), in relation to the ambient temperature.

The hydraulic fluid should be selected such that, within the operating temperature range, the operating viscosity lies within the optimum range (v_{opt}), see shaded section of selection dia-gram.

We recommend the higher viscosity grade is selected in each case.

Example: At an ambient temperature of X℃, the operating emperature in the tank is 60℃,Within the operating viscosity,range (v_{opt} ; shaded area), this corresponds to viscosity range VG46 or VG68. VG68 should be selected.

2. Selection diagram

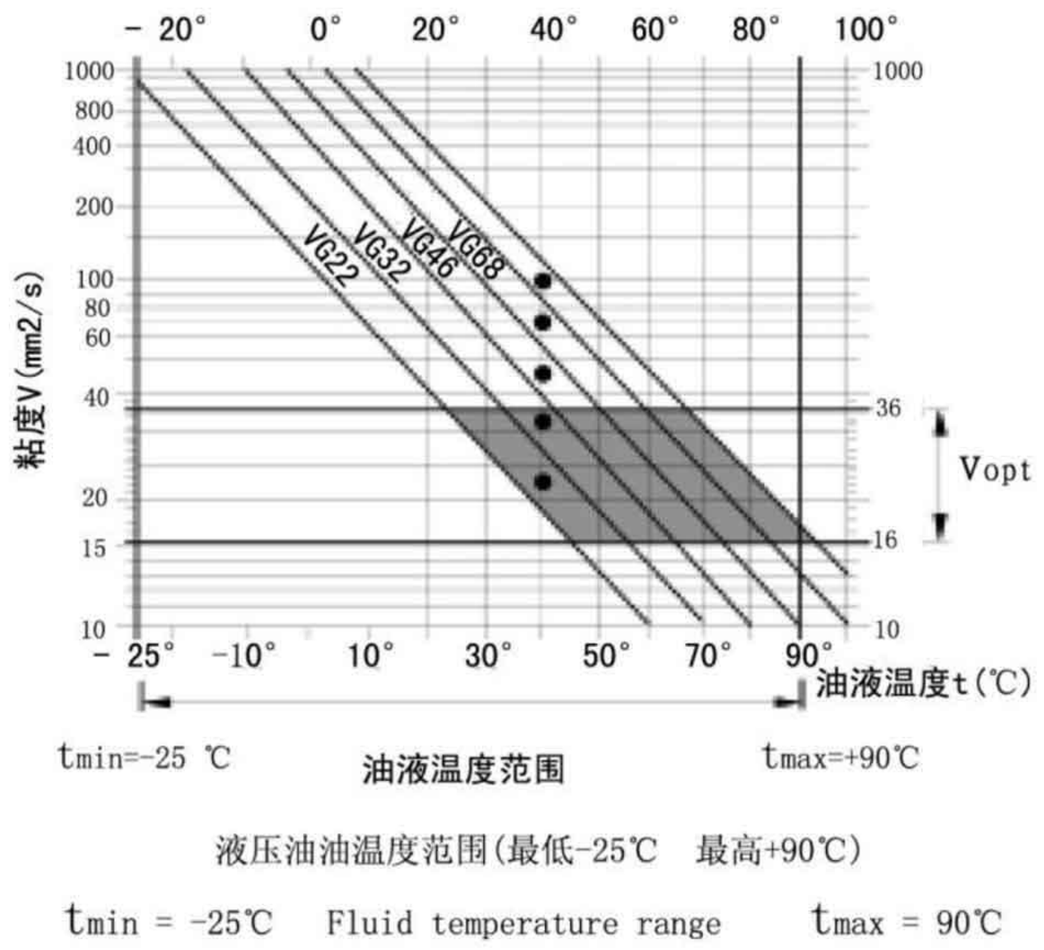

温度范围（请见选择图）

Tmin = -25℃

Tmax = +90℃

Temperature range (see selection diagram)

Tmin = -25℃

Tmax = +90℃

Important: The leakage oil (case drain oil) temperature is influenced by pressure and pump speed and is always higher than the tank temperature. However, at no point in the circuit may the temperature exceed 90℃.

3. Operating viscosity range

In order to obtain optimum efficiency and service life, We recommend that the operating viscosity (at operating temperature) be selected in the range.

V_{opt}= Viscosity of the best work 16～36mm²/s

referred to tank temperature (open circuit).

4. Limit of viscosity range

For short periods at max. permissible leakage oil temperature 90℃,For critical operating conditions the following values apply:

V_{min}=10mm²/s， t_{min} = – 25℃， t_{max} = +90℃

For short periods on cold start: Vmax=100mm²/s

5. Filtration of the hydraulic fluid (axial piston unit)

In order to ensure correct functioning of the axial piston unit, a minimum level of cleanliness class 9 to NAS 1638 18/15 to ISO/DIS 4406 is required.

6. Bearing flushing

For the following operating conditions bearing flushing is required for safe continuous operation:

Applications with special fluids (non-mineral oils), due to limited lubricity and narrow operating temperature range

Operation at critical conditions of temperature and viscosity with mineral oil.

Flushing is recommended with vertical mounting (drive shaft facing upwards), in order to ensure lubrication of the fron bearing and shaft seal.

Flushing is carried out via port "U", which is located in the front flange area of the variable displacement pump. The flushing oil flows through the front bearing and leaves the system together with the pump leakage oil at the drain port.

7. The following flows are recommended for flushing:

Size	40	71	125	180	250	300	355	370	500
QsoS L/min	3	4	5	7	10	13	15	15	20

For the given flushing flows there will be a pressure difference of approx. 2 bar (series 1 and 2) and approx. 3 bar (series 3)between port "U" (including screwed fitting) and the leakage chamber.

8. Notes regarding series 30

When using external bearing flushing at port U the throttle screw, which is to be found at port U, has to be screwed in up to its end stop.

Technical data(valid for operation with mineral oil)

1. Operating pressure range - inlet side

Absolute pressure at port S (suction inlet)

$P_{abs\ min}$ 0.8 bar

$P_{abs\ max}$ 30 bar

2. Operating pressure range - outlet side

Pressure at port B

Nominal pressure p_N _____350 bar

Peak pressure p_{max} _____400 bar

（压力数据符合 DIN24312）(pressure data to DIN 24312)

3. Flow direction: S to B

Determination of inlet pressure p_{abs} at suction port S,or reduction of displacement when increasing drive speed

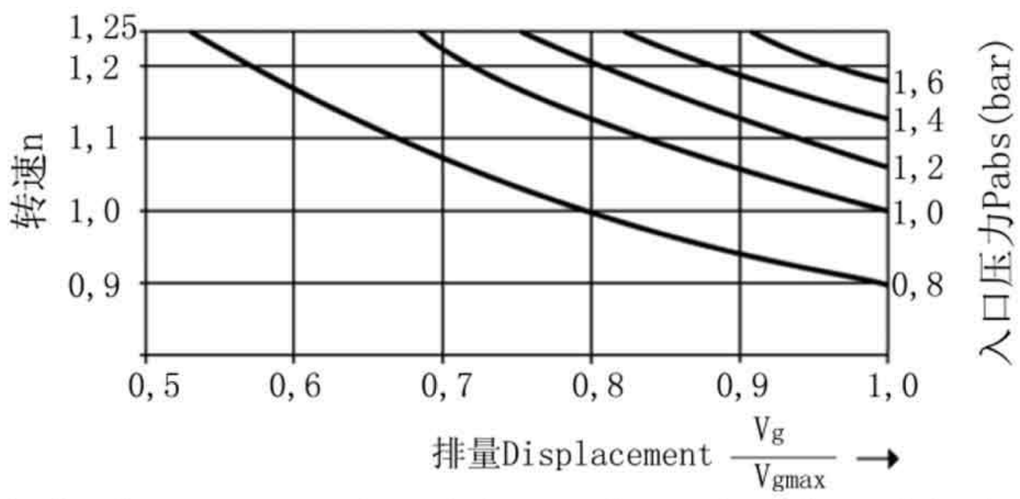

The inlet pressure is the static feed pressure or the minimum dynamic value of the boost pressure.

4. Case drain pressure

The permissible case drain pressure (housing pressure) is dependent on the drive speed (see diagramm).

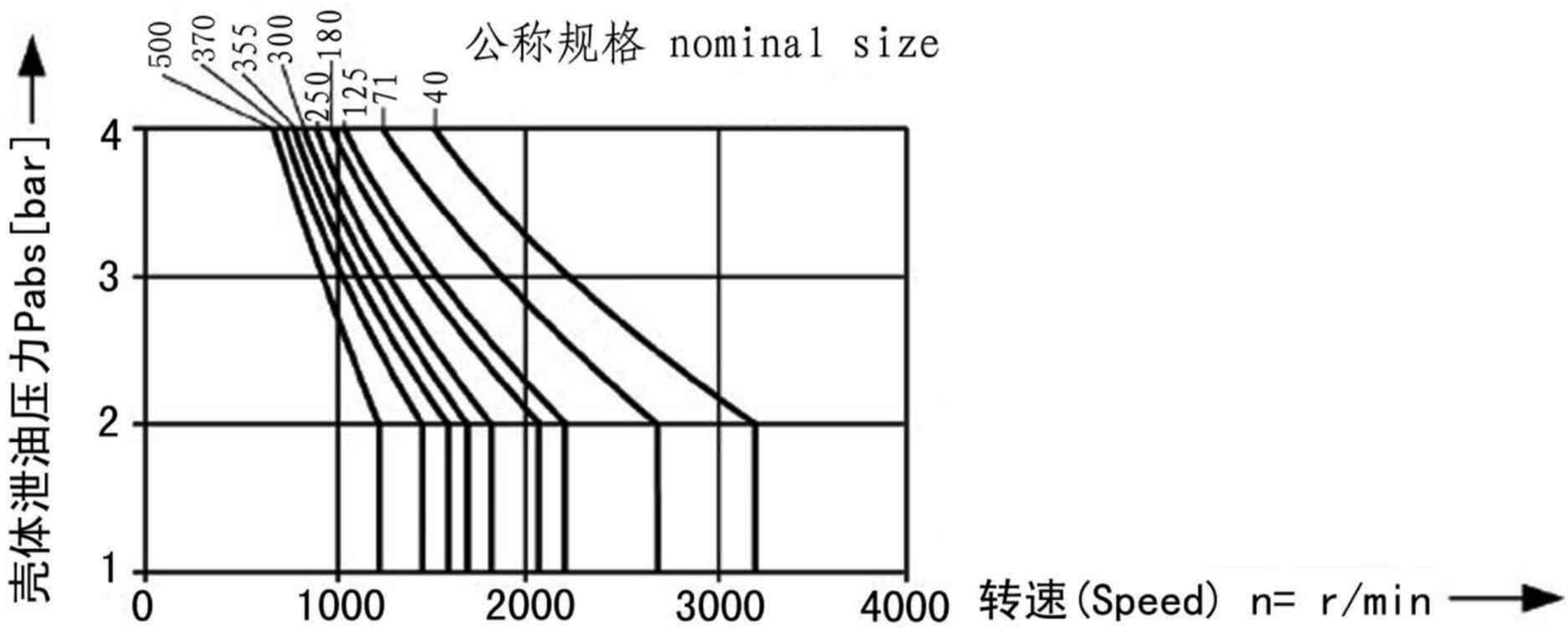

Max. case drain pressure (housing pressure) p_{max}=4 bar,these are approxi mate values. Under certain operating conditions a reduction in these values maybe necessary.

5. Table of values

规格 Nominal size		**40**	**71**	**125**	**180**	**250**	**300**	**355**	**370**	**500**
排量 Displacement	cm^3	**40**	**71**	**125**	**180**	**250**	**300**	**355**	**370**	500
转速 Speed	r/min	2600	2200	1800	1800	1500	1500	1500	1500	1320
Maximum speed	r/min	3200	2700	2200	2100	1800	1700	1700	1700	1600
流量 Flow	L/min	85	107	186	270	375	375	553	553	581
功率 Power	KW	35	62	109	158	219	219	311	311	399
扭矩 Torque	Nm	64	113	199	286	398	398	564	564	795
重量 weight	Kg	39	53	88	102	184	184	207	207	320
最大轴向力 Permissible axial force	N	600	800	1000	1400	1800	2000	2000	2000	2000
最大径向力 Permissible radial force	N	1000	1200	1600	2000	2000	2200	2200	2200	2500

Installation Notes

1. Vertical installation (shaft end pointing upwards)

With a vertical installation, bearing flushing is recommended to provide lubrication for the front bearing, see page 10.

The following installation conditions are to be taken into account:

1.1 Installation in a tank

When the minimum fluid level is the same as or is above the pump flange area then: ports « R/L,T, S » are open (see fig. 1).

If the minimum fluid level lies under the pump flange area then: ports R/L,T and possibly S have to be piped as shown in fig. 2. The conditions stated in point 1.2 applv

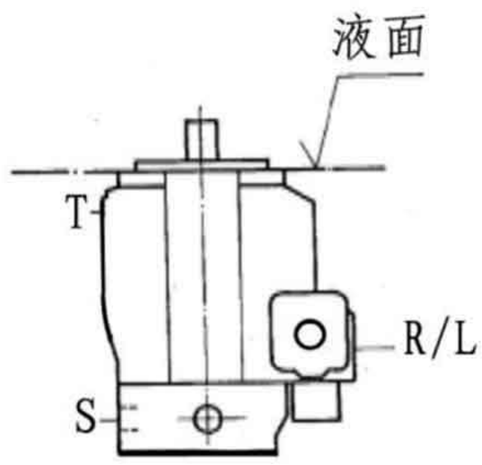

图1 Fig. 1

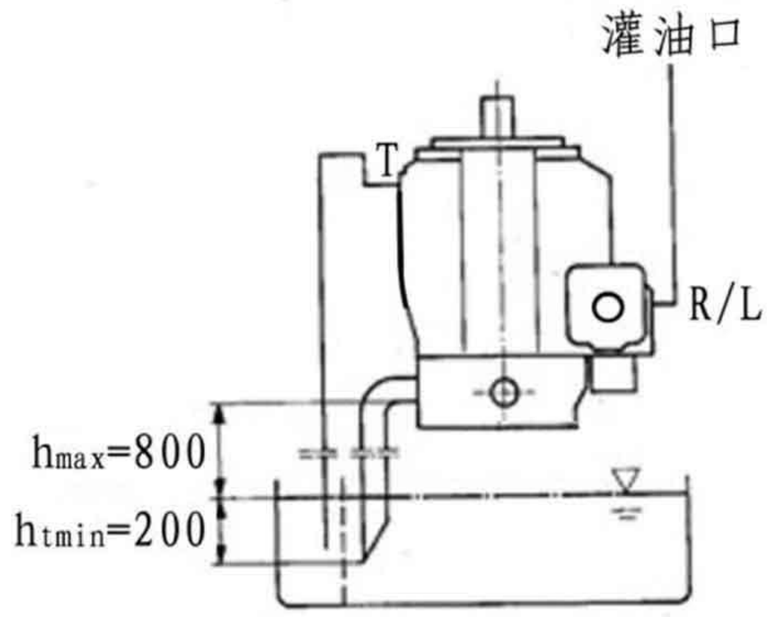

图2 Fig. 2

1.2 Installation outside of a tank

Before installation fill the pump casing with the pump lying in a horizontal position. Port T to the tank,R/L are plugged.Filling possibilites in the installed condition: fill via R bleed via T , afterwards plug port R.

Conditions: A minimum pump inlet pressure (suction pressure) of 0.8 bar abs. must be observed. Avoid mounting the pump above the tank if low noise operation is required

2. Horizontal installation

The highest situated ports «T,K 1, K2,R/L » must be utilised for filling/bleeding and subsequently used as the drain connection.

2.1 Installation in a tank

When the minimum fluid level is the same as or lies above the upper edge of the pump,then: drain port and port S are open (see fig. 3).

When the minimum fluid level lies under the pump upper edge then: drain port and possibly port »S« has to be piped, see fig. 4. Conditions are as per point 1.2. Fill pump casing before commissioning.

2.2 Installation outside of a tank

a) For installation above a tank see fig. 4. Conditions are as per point 1.2. Fill pump casing before running.

b)For installation under the tank.Pipe drain port and port S as per fig. 5. Fill pump casing before running.

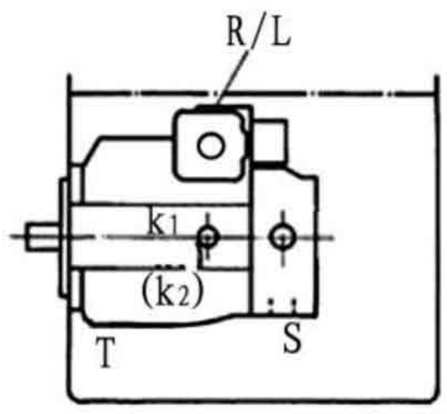

图3 Fig. 3

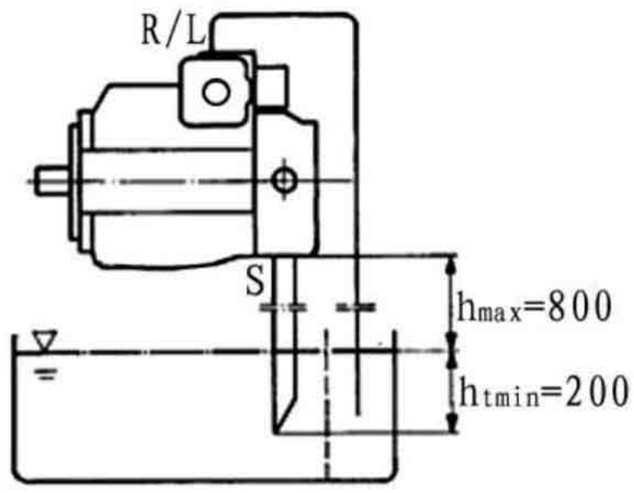

图4 Fig. 4

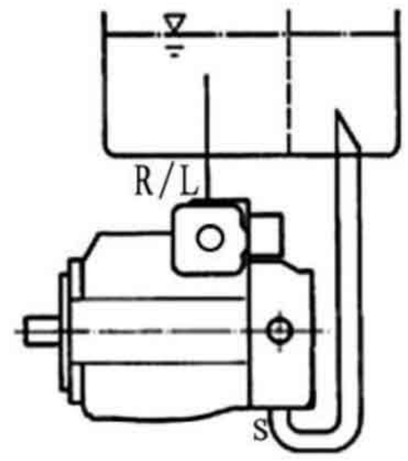

图5 Fig. 5

Unit dimensions nominal size

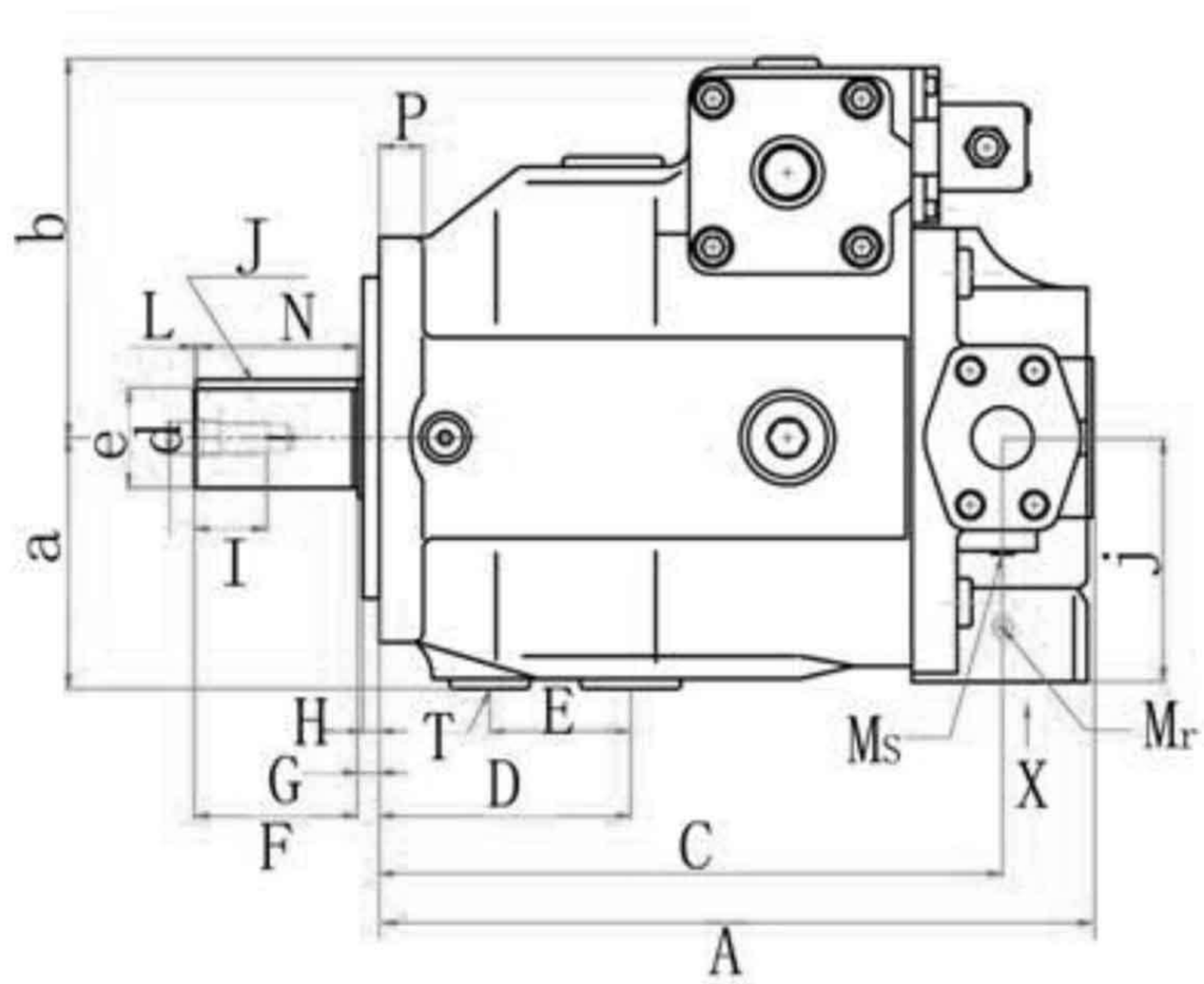

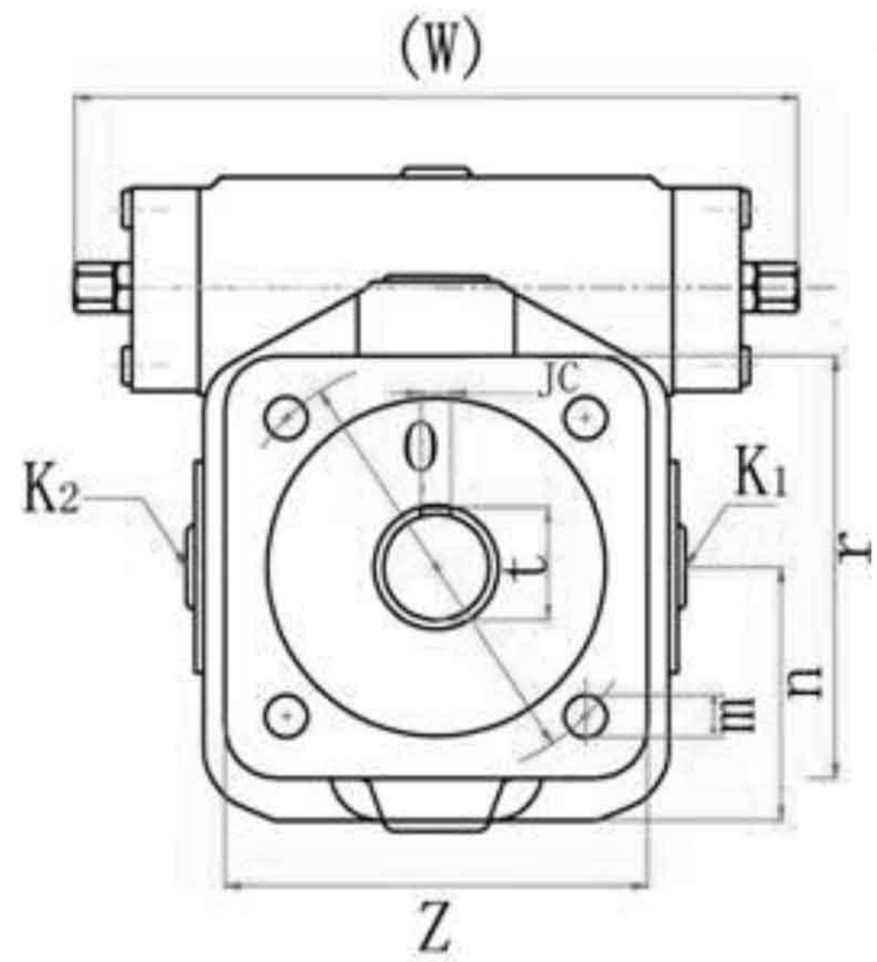

顺时针旋转时先导阀安装位置

Pilot valve mounting position

for clockwise direction of rotation

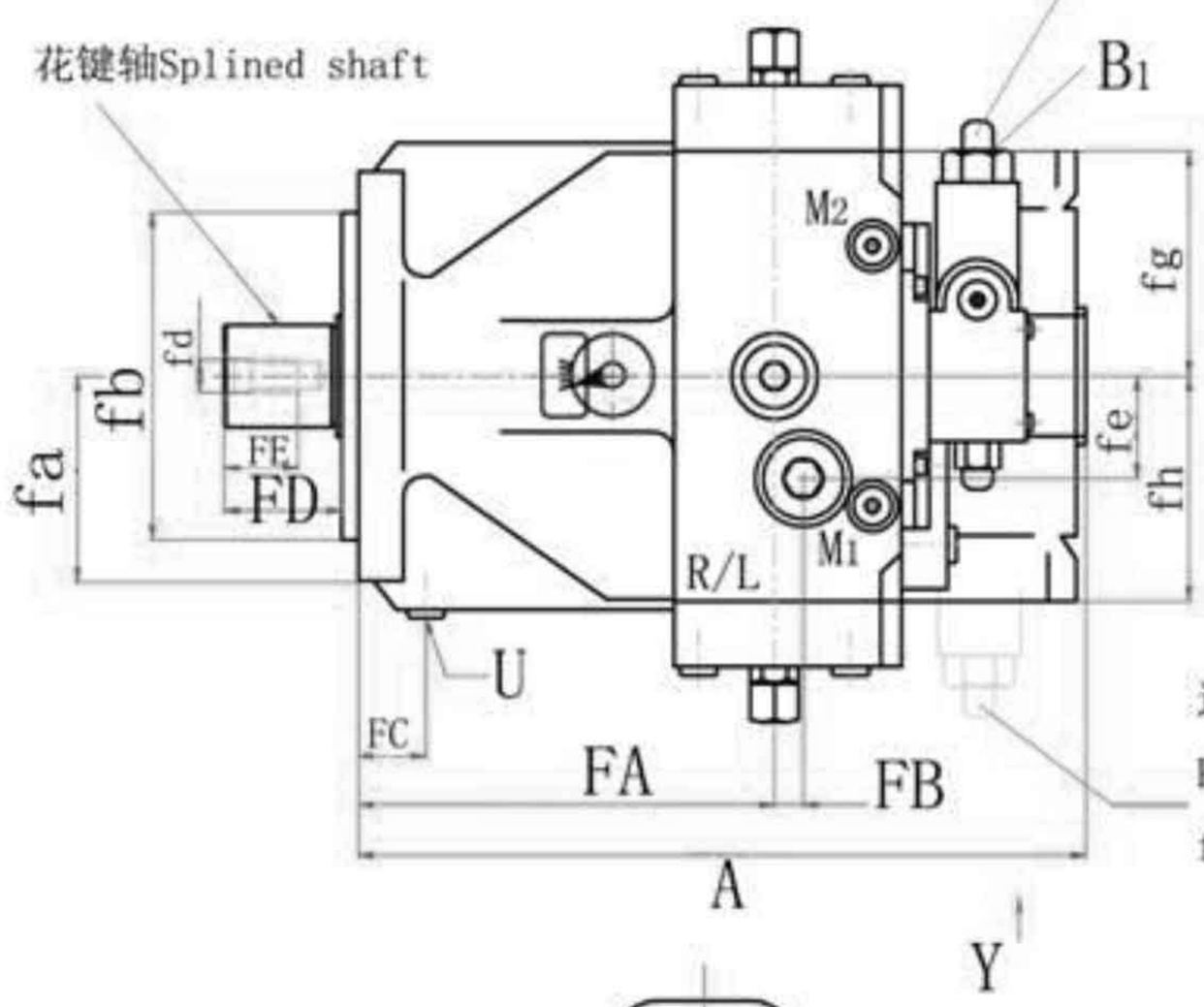

逆时针旋转时先导阀安装位置

Pilot Valve mounting position

for anti-clockwise direction of rotation

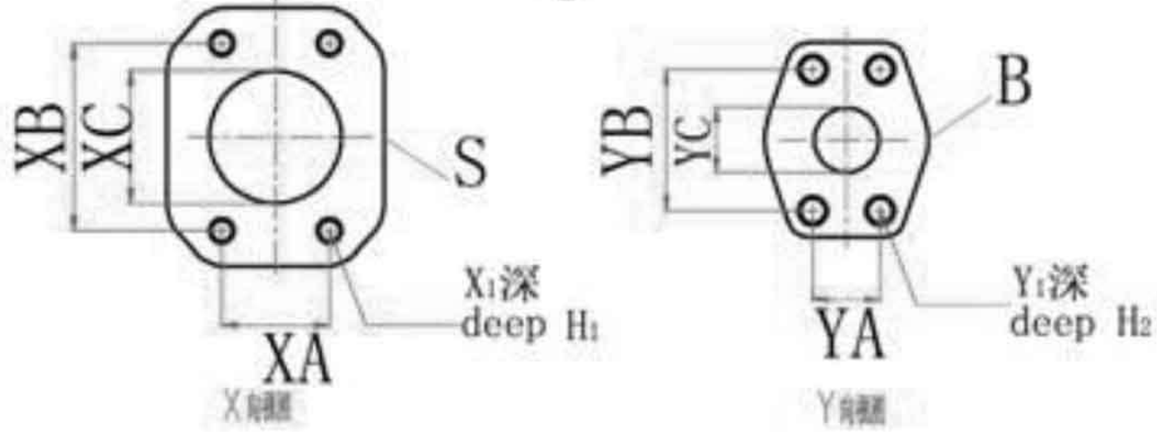

1. Table of unit dimensions nominal size

Size	A	C	D	E	F	G	H	I	J（key）	L	N	O	P	W	JC	Z	series
40	269	227	90	52	58	10	8	22	10X8X56	1.5	56	160	18	260	10	150	1
71	298	254	101	61	70	10	8	22	12X8X68	1.5	68	180	18	296	12	170	1
125	355	310	125	70	82	10	8	36	14X9X80	1.5	80	200	22	354	14	200	2. 3
180	379	318	125	70	82	10	8	36	14X9X80	1.5	80	200	22	354	14	200	2. 3
250	435	380	150	90	105	10	8	42	18X11X100	1.5	100	280	30	424	18	265	2. 3
300	468	393	150	90	105	10	8	42	20X12X100	1.5	100	280	30	424	20	265	3
355	468	393	150	90	105	10	8	42	20X12X100	1.5	100	280	30	424	20	265	3
370	468	393	150	90	105	10	8	42	20X12X100	1.5	100	280	30	424	20	265	3
500	520	441	155	80	130	47	16	42	22X14X125	3	125	450	32	510	22	380	3

2. Table of unit dimensions nominal size

Size	a	b	d	e	j	m	n	r	t	fa	fb	fd	fe	fg.fh
40	91	140	M10	Ø32k6	80	15	85	150	35	79	Ø125h8	M10	30	80
71	106	157	M12	Ø40k6	92.5	15	97	170	43	92	Ø140h8	M12	34	92.5
125	120.5	191	M16	Ø50k6	112.5	20	114.5	200	53.5	112	Ø160h8	M16	50	112.5
180	120.5	191	M16	Ø50k6	116	20	114.5	200	53.5	112	Ø160h8	M16	50	112.5
250	151	238	M20	Ø60m6	144	24	144.5	265	64	144	Ø224h8	M20	55	144
300	151	238	M20	Ø70m6	144	24	144.5	265	74.5	144	Ø224h8	M20	55	148
355	151	238	M20	Ø70m6	144	24	144.5	265	74.5	144	Ø224h8	M20	55	148
370	151	238	M20	Ø70m6	144	24	144.5	265	74.5	144	Ø224h8	M20	55	148
500	190	283	M20	Ø80m6	200	24	190	380	85	189	Ø315h8	M20	50	182

3. Table of unit dimensions nominal size

Size	FA	FB	FC	FD	FE
40	144	25	30	36	22
71	166	27	27	45	28
125	203	14	33	54	36
180	203	14	33	54	36
250	248	17	44	70	42
300	248	17	44	82	42
355	248	17	44	82	42
370	248	17	44	82	42
500	279	50	16	90	42

4. Table of unit dimensions nominal size

Size	XA	XB	XC	X1	H1	S Suction port	YA	YB	YC	Y1	H2	B Pressure port
40	35.7	68.9	40	M12	20	1 1/2”	23.8	50.8	20.5	M10	17	1 3/4”
71	42.9	77.8	50	M12	20	2”	27.8	57.2	25	M12	20	1”
125	50.8	88.9	75	M12	17	2 1/2”	31.8	66.7	31	M14	19	1 1/4”
180	61.9	106.4	75	M16	24	3”	31.8	66.7	31	M14	19	1 1/4
250	61.9	106.4	75	M16	24	3”	36.5	79.4	40	M16	21	1 1/2
300	77.8	130.2	100	M16	24	4”	36.5	79.4	40	M16	21	1 1/2
355	77.8	130.2	100	M16	24	4”	36.5	79.4	40	M16	21	1 1/2
500	92.1	152.4	125	M16	24	5”	44.5	96.8	50	M20	24	2”

5.Table of unit dimensions nominal size

Size	K_1.K_2 Flushingports K_1.K plugged	Oil drain T plugged	Test points plugged M_B.M_S	Oil plugged filling or air Bleed R(L)	Flushing ports U (plugged)	M1.M2 Test points for pressure (plugged)
40	M22X1.5 深 14	M22X1.5 深 14	M14X1.5 深 12	M22X1.5	M14X1.5 深 12	M14X1.5
71	M27X2 深 16	M27X2 深 16	M14X1.5 深 12	M27X2	M14X1.5 深 12	M14X1.5
125	M33X2 深 18	M33X2 深 18	M14X1.5 深 12	M33X2	M14X1.5 深 12	M14X1.5
180	M33X2 深 18	M33X2 深 18	M14X1.5 深 12	M33X2	M14X1.5 深 12	M14X1.5
250	M42X2 深 20	M42X2 深 20	M14X1.5 深 12	M42X2	M14X1.5 深 12	M18X1.5
300	M42X2 深 20	M42X2 深 20	M14X1.5 深 12	M42X2	M18X1.5 深 12	M18X1.5
355	M42X2 深 20	M42X2 深 20	M14X1.5 深 12	M42X2	M18X1.5 深 12	M18X1.5
500	M48X2 深 22	M48X2 深 22	M48X1.5 深 22	M48X2	M18X1.5 深 12	M18X1.5

A4VSO40 安装尺寸图：

1. 系列，规格 40 的元件尺寸

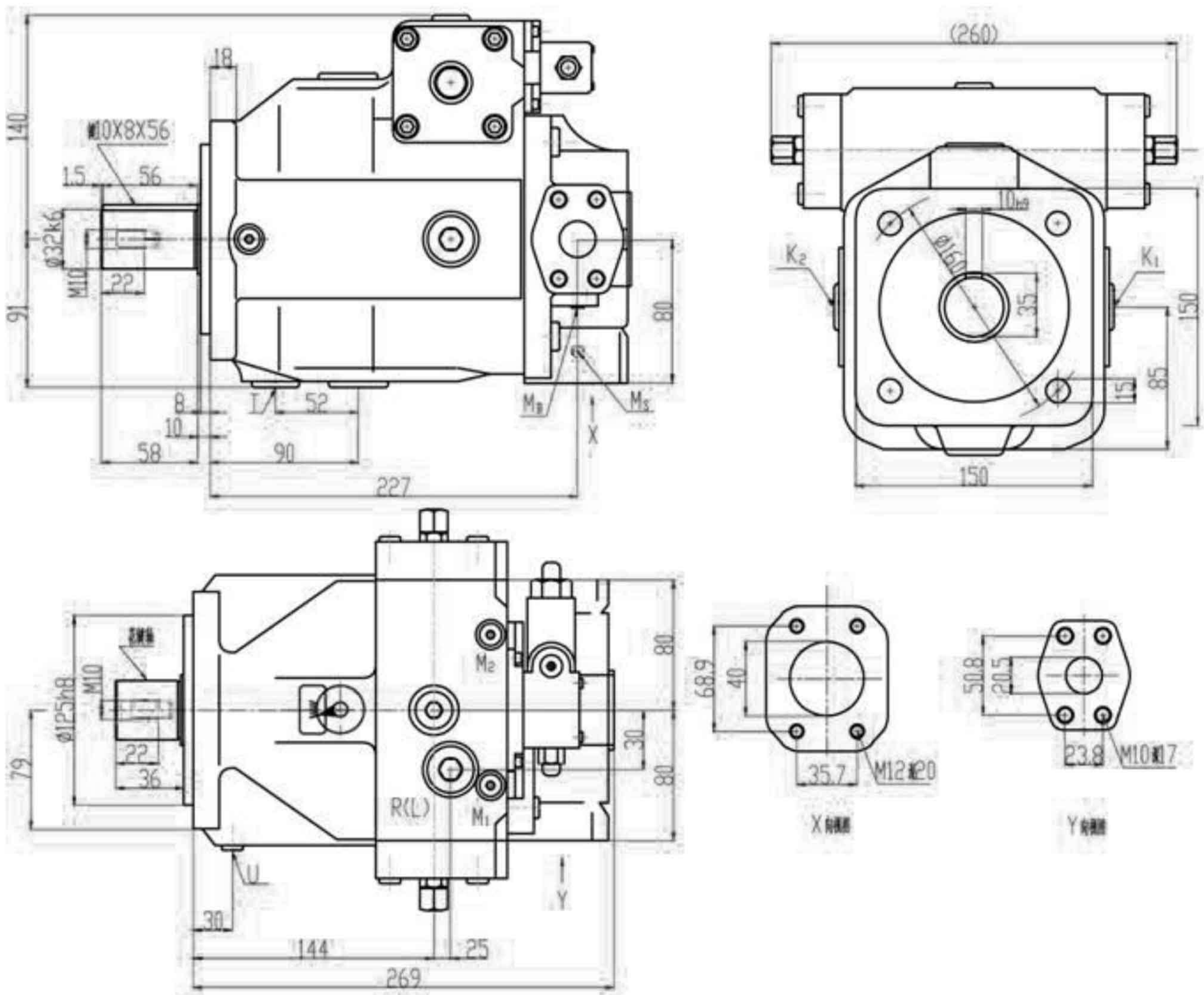

B	压力油口	SAE 3/4″（高压系列）	S	吸油口	SAE1 1/2″（标准系列）
B	辅助油口	M22X1.5;深14（堵）	K_1，K_2	充洗油口	M22X1.5;深14(堵)
			T	泄油口	M22X1.5深14（堵）
			M_B.M_S	测试点	M14X1.5深12（堵）
			R(L)	注油口+通气口	M22x1.5
			U	冲洗油口	M14x1.5深12(堵)

A4VSO71 安装尺寸图：

1.系列，规格 71 的元件尺寸

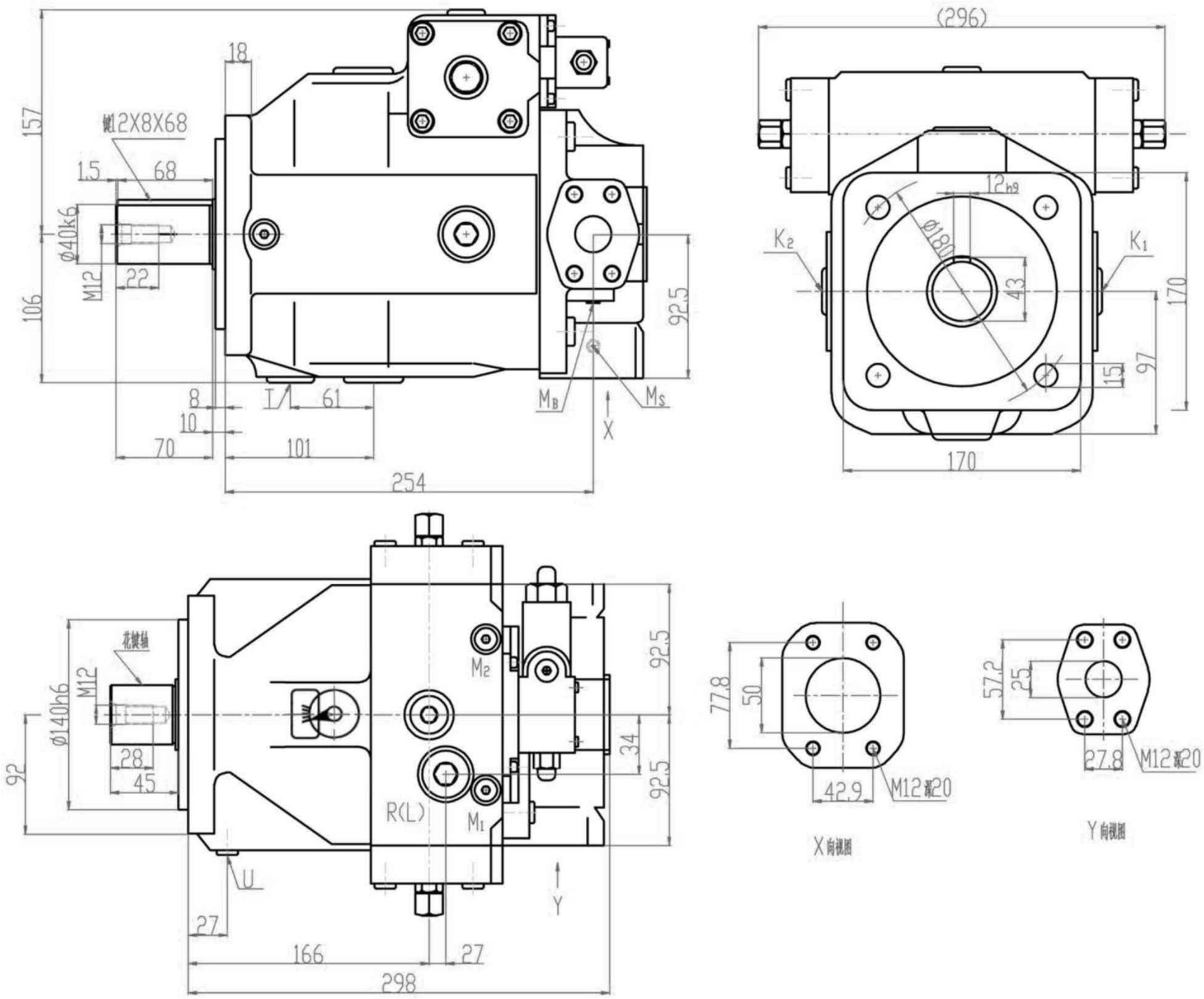

B	压力油口	SAE 1″（高压范围）	S	吸油口	SAE 2″（标准范围）
B	辅助油口	M27X2；深16（堵）	K_1，K_2	充洗油口	M27X2；深16（堵）
			T	泄油口	M27X2深16（堵）
			M_B，M_S	测试点	M14X1.5深12（堵）
			R(L)	注油口+通气口	M27X2
			U	冲洗油口	M14X1.5深12（堵）

A4VSO125 安装尺寸图：

2.3 系列，规格 125 的元件尺寸

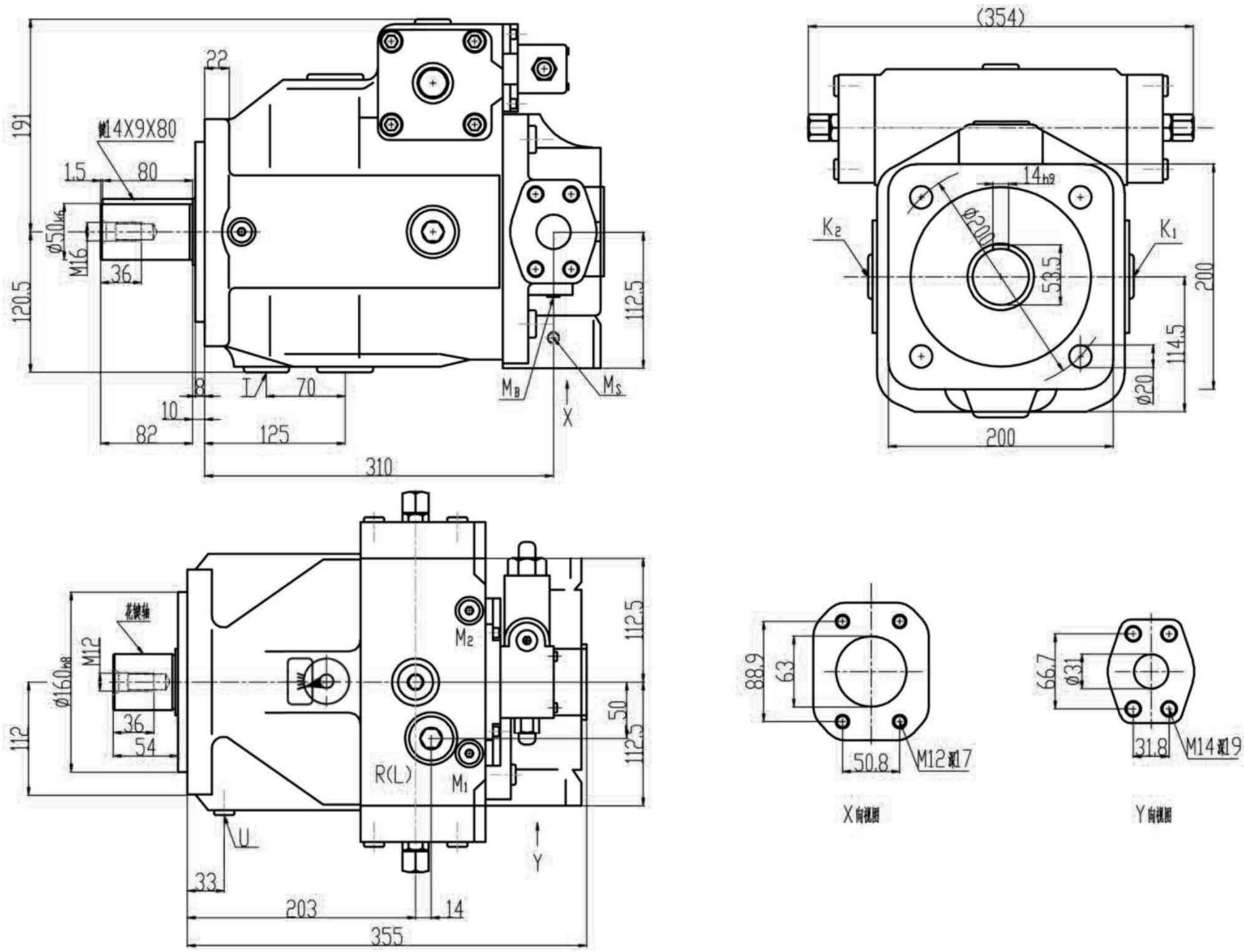

B 压力油口	SAE1 1/4″（高压范围）	S 吸油口	SAE 2 1/2″（标准范围）
B 辅助油口	M33X2；深18（堵）	K_1，K_2 充洗油口	M33X2；深18(堵)
		T 泄油口	M33X2深18（堵）
		M_B.M_S 测试点	M14X1.5深12（堵）
		R(L)注油口+通气口	M33X2
		U 冲洗油口	M14X1.5深12(堵)

A4VSO180 安装尺寸图：

2.3 系列，规格 180 的元件尺寸

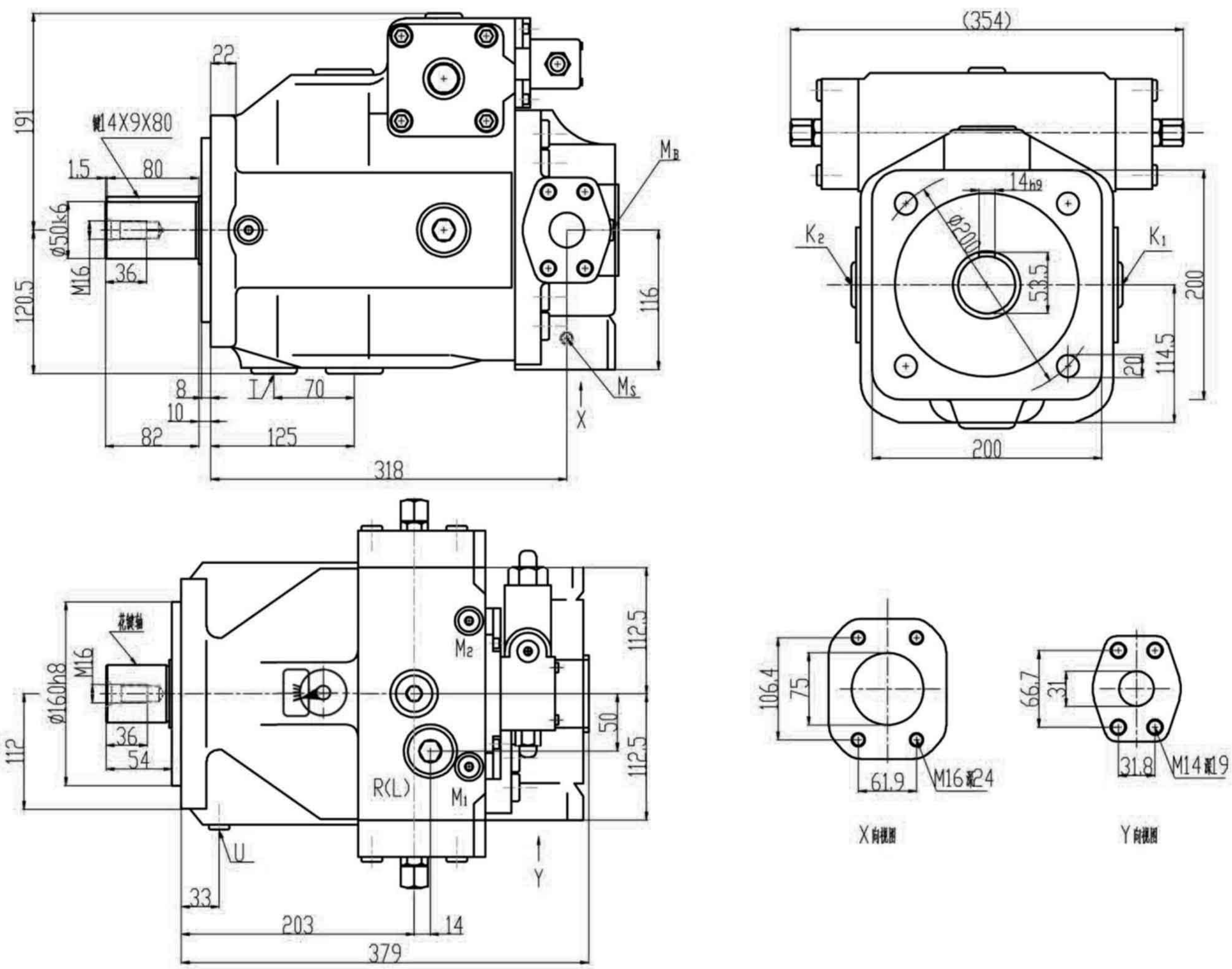

B	压力油口	SAE1 1/4″（高压范围）	S	吸油口	SAE 3″（标准范围）
B	辅助油口	M33X2；深18（堵）	K_1，K_2	充洗油口	M33X2；深18(堵)
			T	泄油口	M33X2深18（堵）
			M_B，M_S	测试点	M14X1.5深12（堵）
			R(L)	注油口+通气口	M33X2
			U	冲洗油口	M14X1.5深12(堵)

A4VSO250 规格尺寸图：

3 系列，规格 250 的元件尺寸

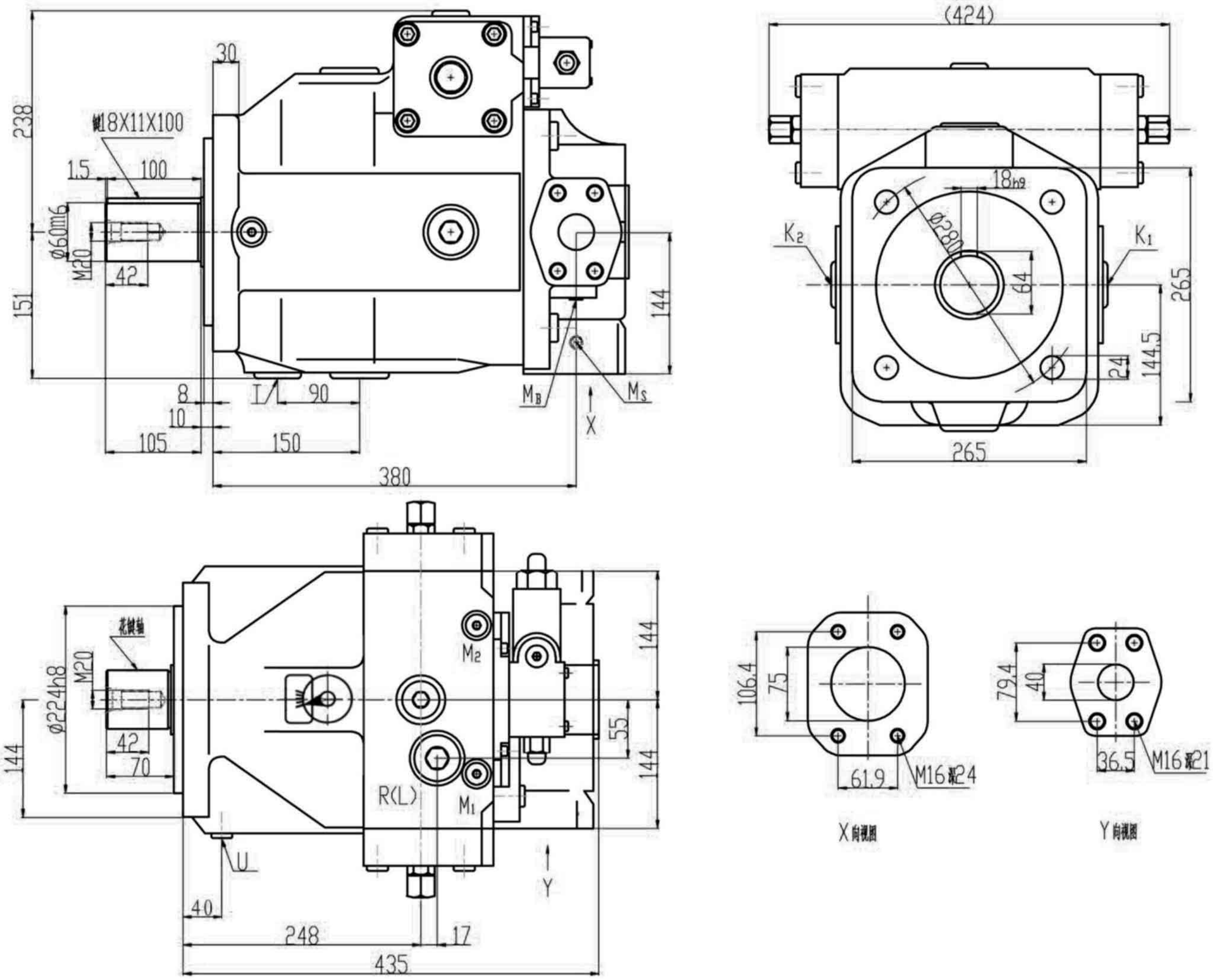

B	压力油口	SAE1 1/2″（高压范围）	S	吸油口	SAE 3″（标准范围）
B	辅助油口	M42X2；深20（堵）	K_1，K_2	充洗油口	M42X2；深20（堵）
			T	泄油口	M42X2深20（堵）
			M_B，M_S	测试点	M14X1.5深12（堵）
			R(L)	注油口+通气口	M42X2
			U	冲洗油口	M14X1.5深12（堵）

A4VSO300/355/370 安装尺寸图：

2.3 系列，规格 355 的元件尺寸

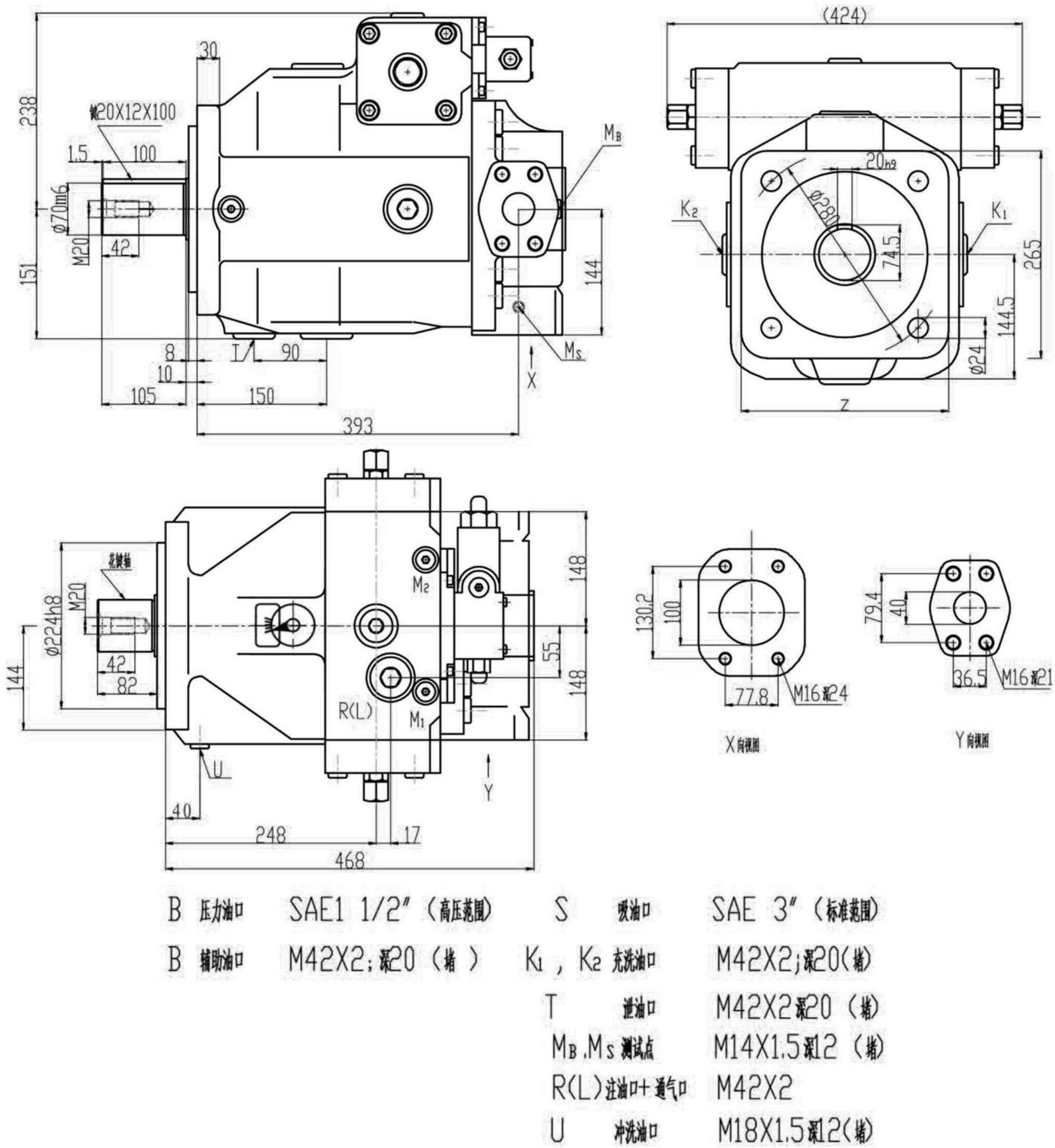

B	压力油口	SAE1 1/2″（高压范围）	S	吸油口	SAE 3″（标准范围）
B	辅助油口	M42X2；深20（堵）	K_1，K_2	充洗油口	M42X2；深20（堵）
			T	泄油口	M42X2深20（堵）
			M_B，M_S	测试点	M14X1.5深12（堵）
			R(L)	注油口+通气口	M42X2
			U	冲洗油口	M18X1.5深12（堵）

A4VSO500 安装尺寸图：

3 系列，规格 500 的元件尺寸

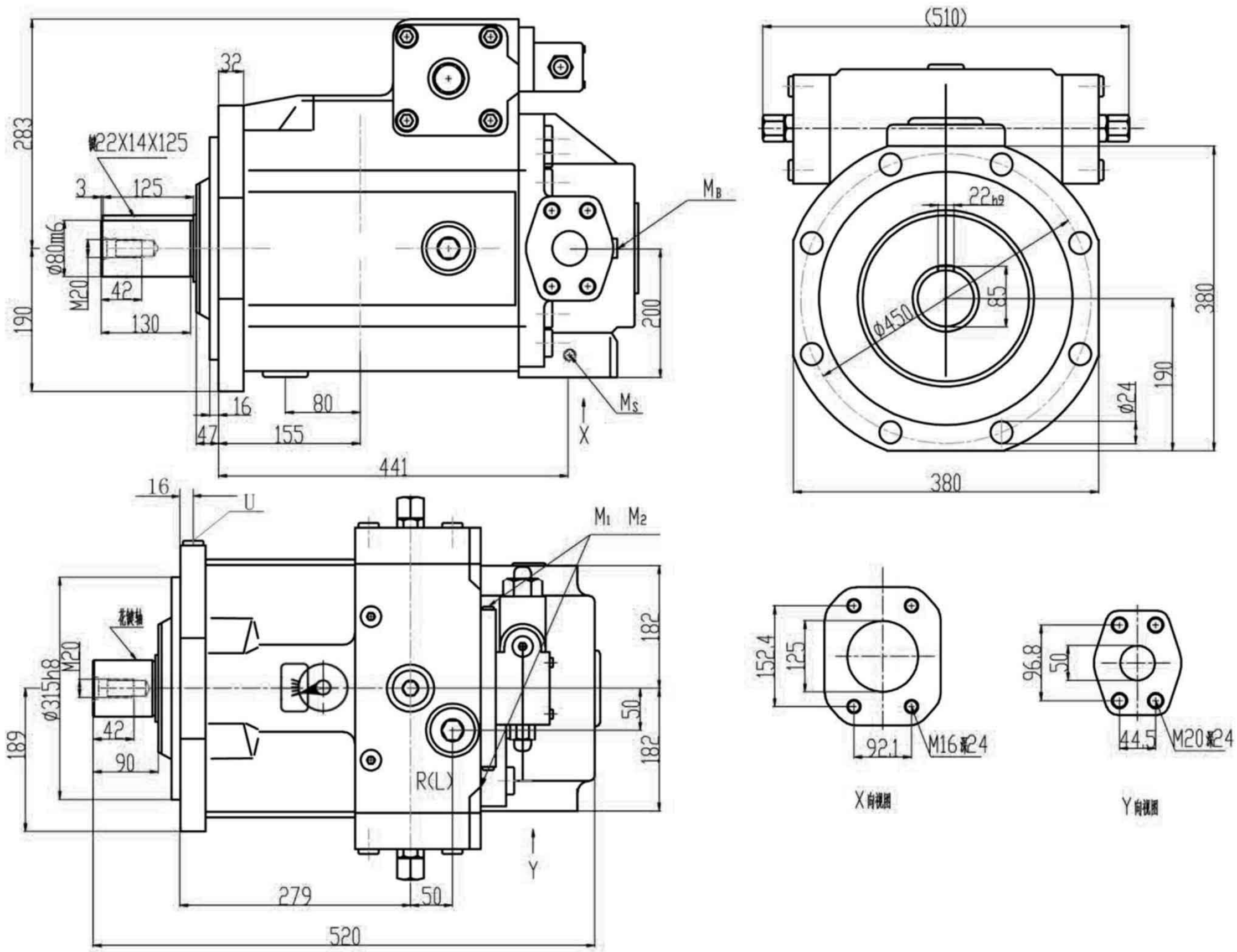

B	压力油口	SAE2″（高压范围）	S	吸油口	SAE 5″（标准范围）
B	辅助油口	M48X2；深22（堵）	K_1，K_2	充洗油口	M48X2；深22（堵）
			T	泄油口	M48X2深22（堵）
			M_B，M_S	测试点	M18X1.5深12（堵）
			R(L)	注油口+通气口	M48X2
			U	冲洗油口	M18X1.5深12（堵）

1. Pressure control DR

Regulates max. pressure in a hydraulic system .Setting range 20 – 35MP. Optional: Remote control (DRG).

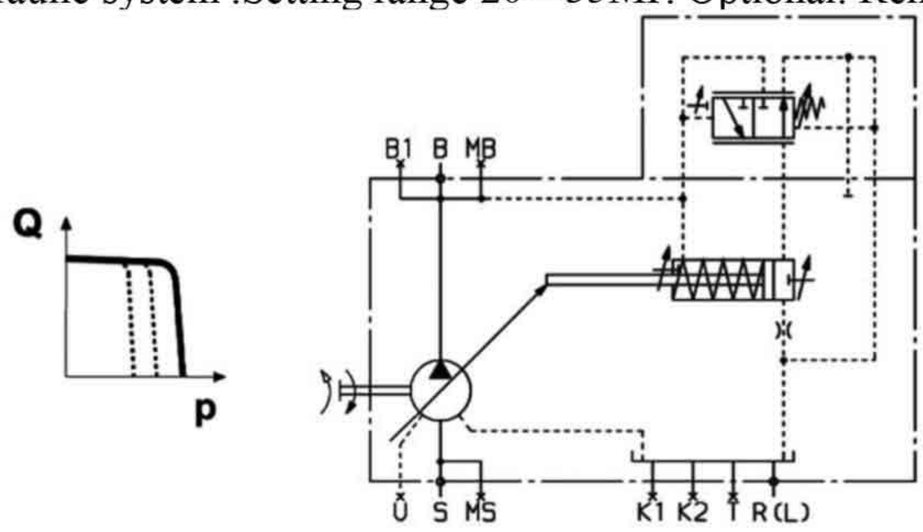

2.Pressure control DP for combined work

Pressure control for multi axial piston pump A4VSO' combined work. DPF) Option: Flow control (DPF)

3. Flow control FR

Maintains a constant flow in a hydraulic system,Optional: Remote pressure control (FRG), Orifice in X port plugged (FR1, FRG1).

Not included within the scope of supply

4. Pressure and flow control DFR

Keep constant flow of pump while hydraulic oil flow is variable. Mechanical adjustable pressure control is prior to the flow pressure control here. Option: plug the hole in the oil port X.

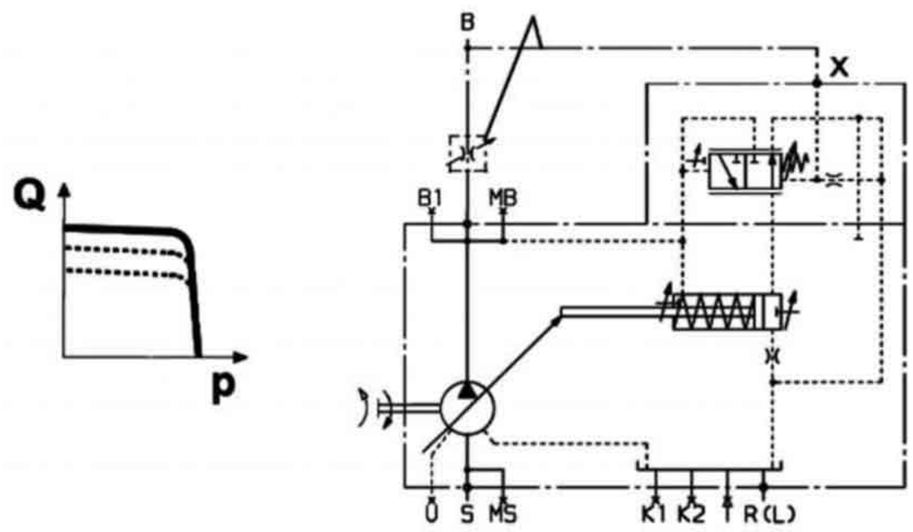

5. Hyperbola power control LR2

The hyperbolic power control maintains a constant preset drive power at the same input speed.
Hyperbola power control keeps the setting drive power stable at the same output rotation
Options: pressure control, remote control, flow control, hydraulic stroke limit, machine stroke limit, hydraulic two points control, and the electric unloading valve that helps to star up.

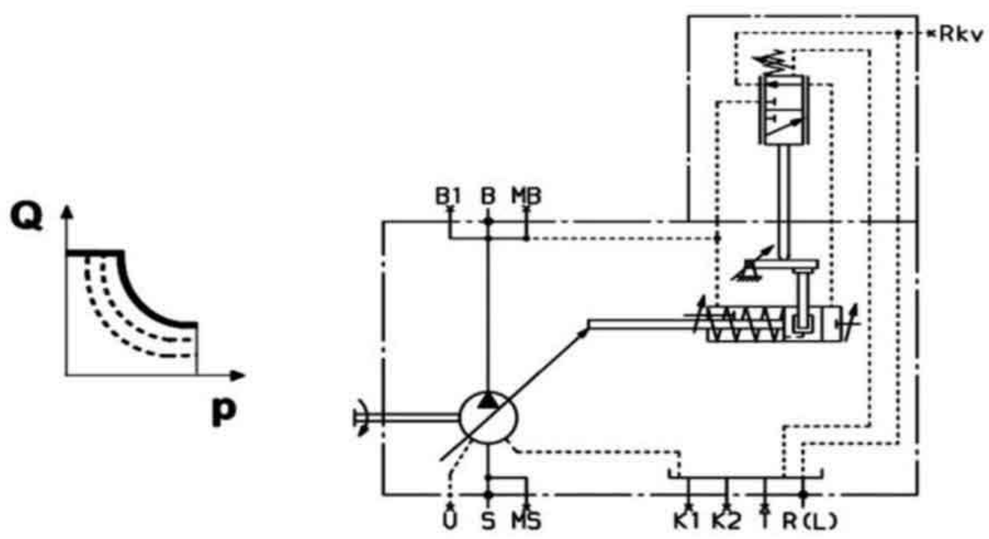

6. Manual control MA

Stepless flow adjustment by means of a hand- wheel.

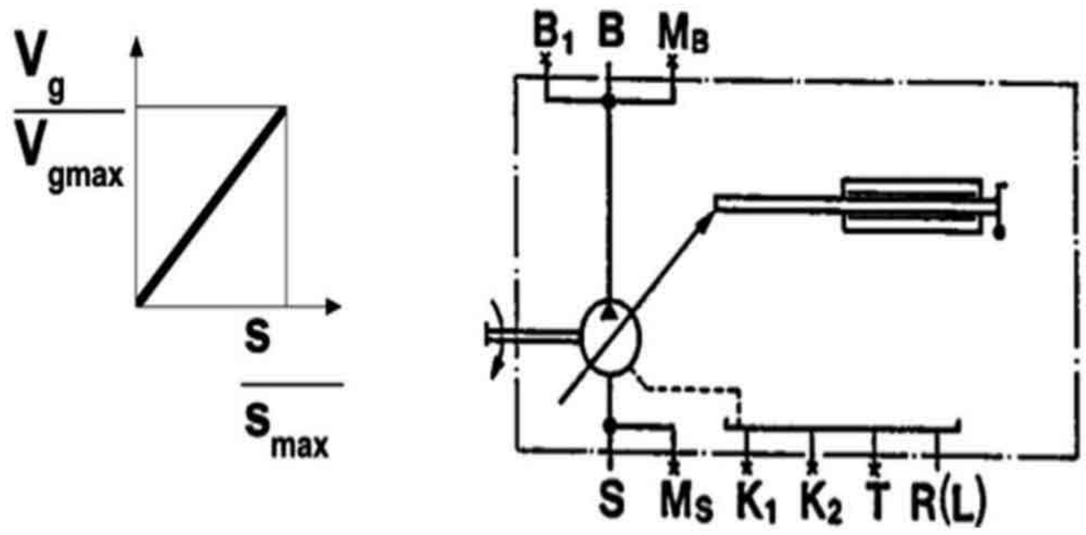

7. Hydraulic flow control EO1/2

The stepless adjustment of the displacement is accomplished by means of a proportional valve with electrical feedback of the swivel angle.

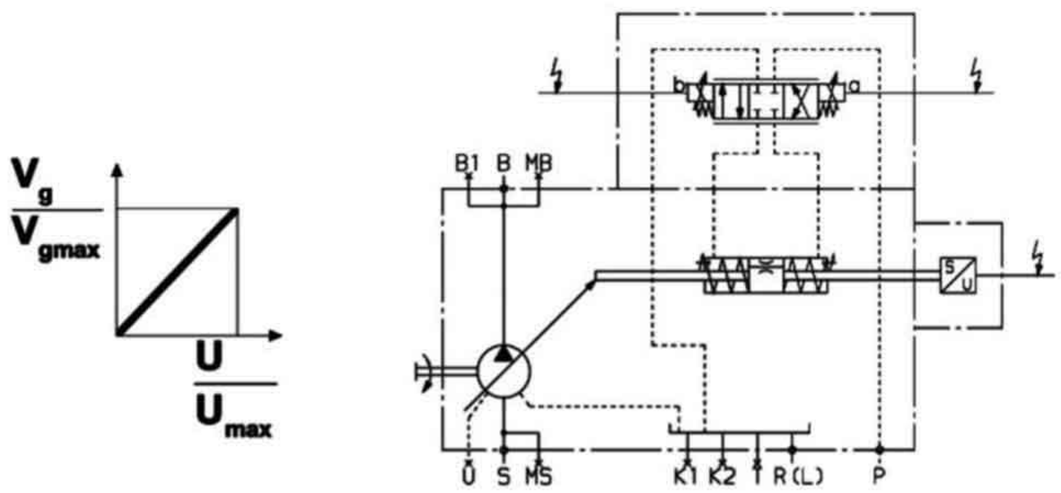

8. Hydraulic control LR2N

pilot pressure dependent, normally Vgmin.

The flow (displacement) is proportional to the pilot pressure in Ppilot.The additional hyperbolic power control overrides the pilot pressure signal and holds the preset drive power constant.

Shown in actuated position i.e. P is pressurized:

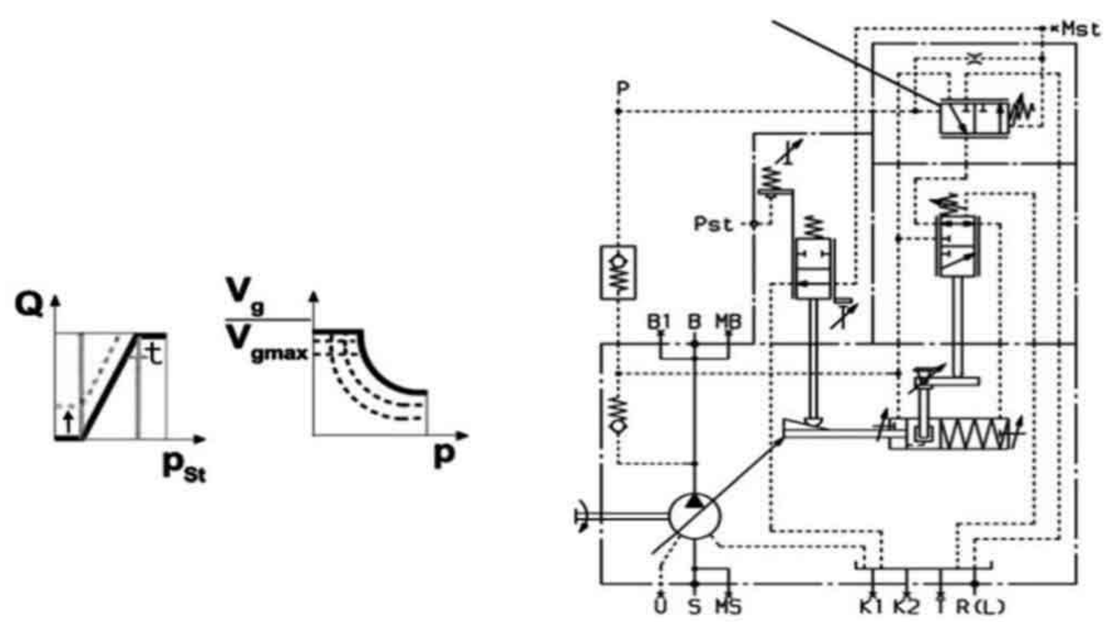

9. Motor control MA

10. Motor control EM

Stepless adjustment of flow by motor. Control in the programme order, and selectable different middle displacement by plug-in style limit switch or potentiometer.

11. Hydraulic control HW relevant to the position.
Stepless adjustment of flow by sine β of rotating pin angle. Option: Hyperbola power control (HWP).

12. Hydraulic control HD relevant pilot pressure

The stepless displacement of the pump is relevant to the pilot pressure. Adjustment is in proportion to the pilot pressure.

Options:pilot pressure curve (HD1. HD2, HD3), pressure control (HD. B), remote control (HD. GB), power control (HD1P), power control, and electric pilot pressure control (HD1T).

13. Hydraulic flow control HM1/2/3 relevant to pilot control flow
Stepless adjustment of pump displacement, relevant to oil flow of oil port X1 and X2.
Application: two points control
Device for servo or proportional control.

14. Hydraulic flow control HS, HS1, HS3 with servo or proportional valve
Stepless adjustment of displacement is realized by servo or proportional valve of bevel disc angle electric feedback

15. Hydraulic flow control EO1/2
Stepless adjustment of displacement is made by proportional valve of bevel disc angle electric feedback
Electron control
Options: short circuit valve (EO1K,EO2K), no valve (EO1E,EO2E)

16.Secondary rotating speed control DS1
Rotating speed control DS1 controls the secondary device, providing sufficient torque for motor to keep rotating. That torque is in proportion to displacement when it connects with the stable pressure system

输入功率和流量

（工作液体:液压油ISO VG 46 DIN 51519，t=50℃）

总效率 $\eta_t = \frac{q_v \ p}{P_{q_v\,max} \ 600}$

容积效率 $\eta_v = \frac{q_v}{q_{vtheor}}$

规格40

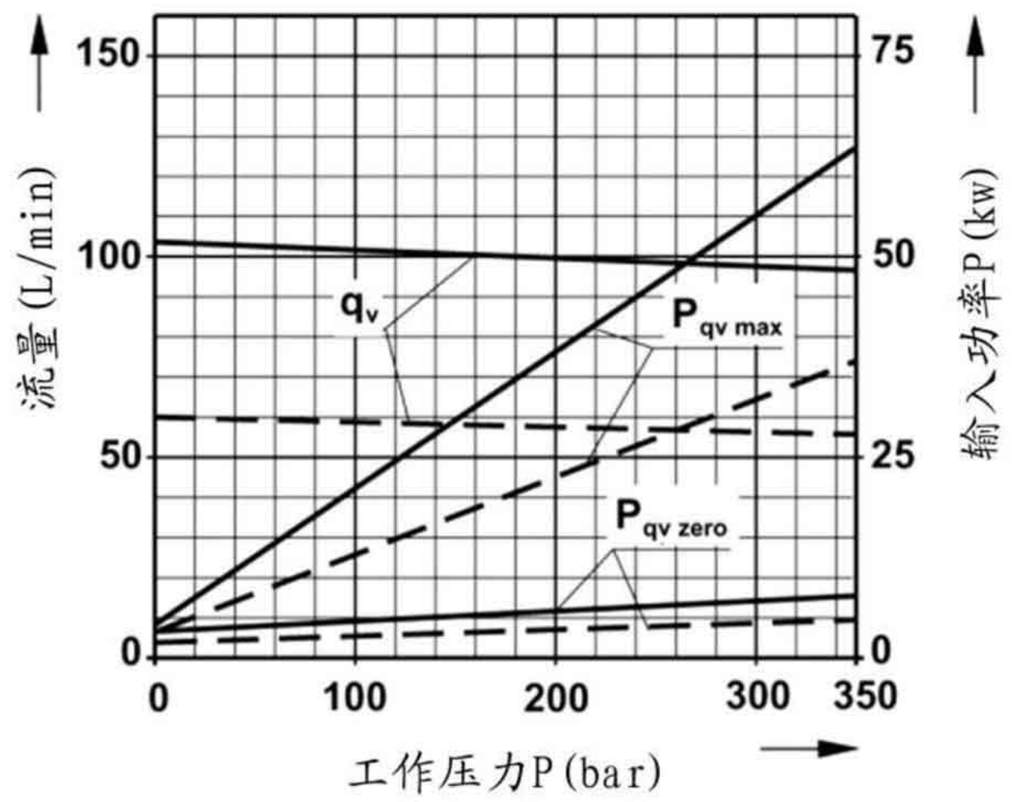

n = 2600 rpm
n = 1500 rpm

规格125

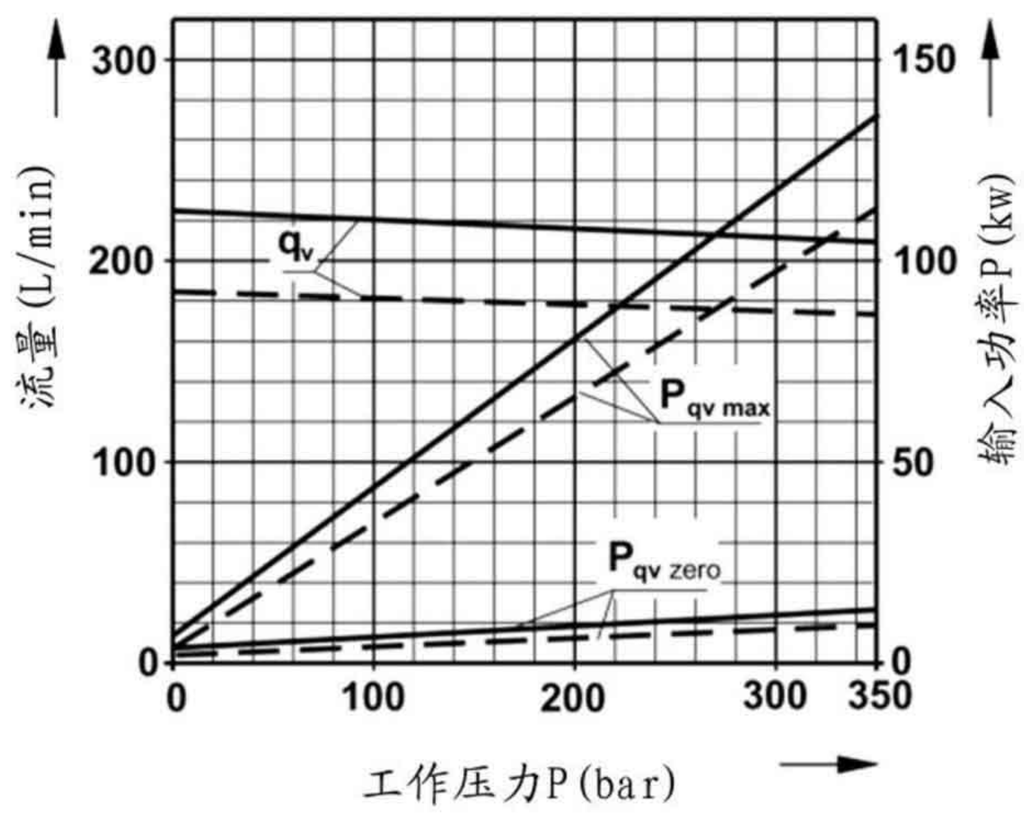

n = 1800 rpm
n = 1500 rpm

规格71

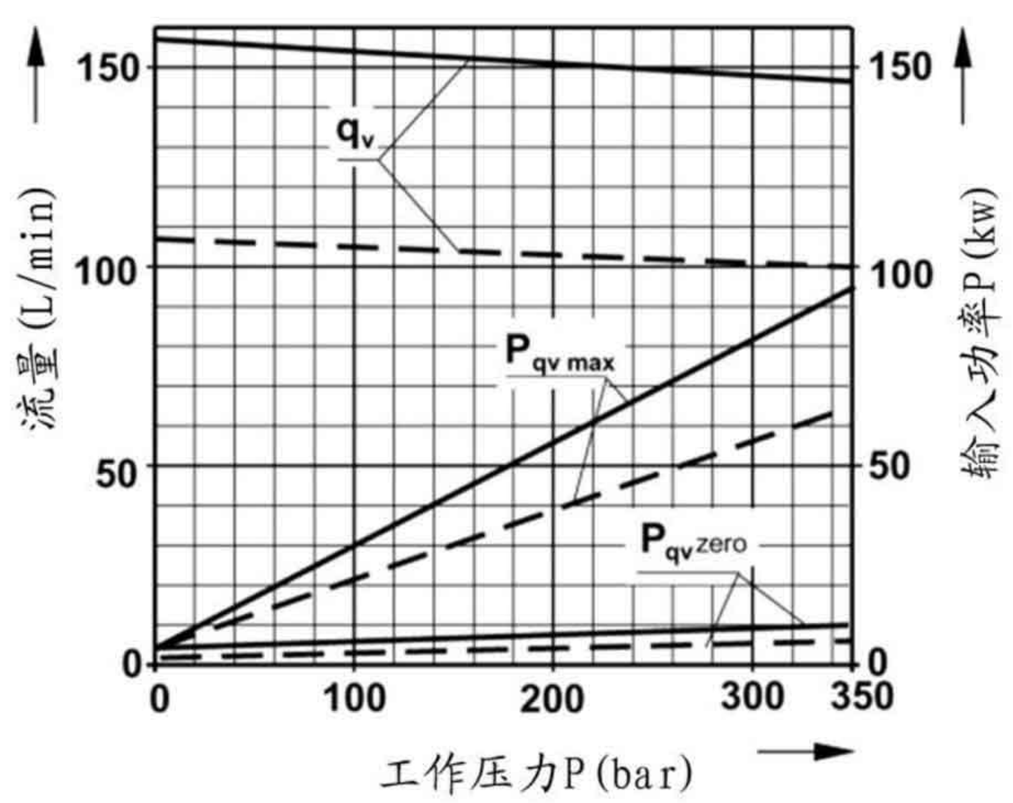

n = 2200 rpm
n = 1500 rpm

规格180

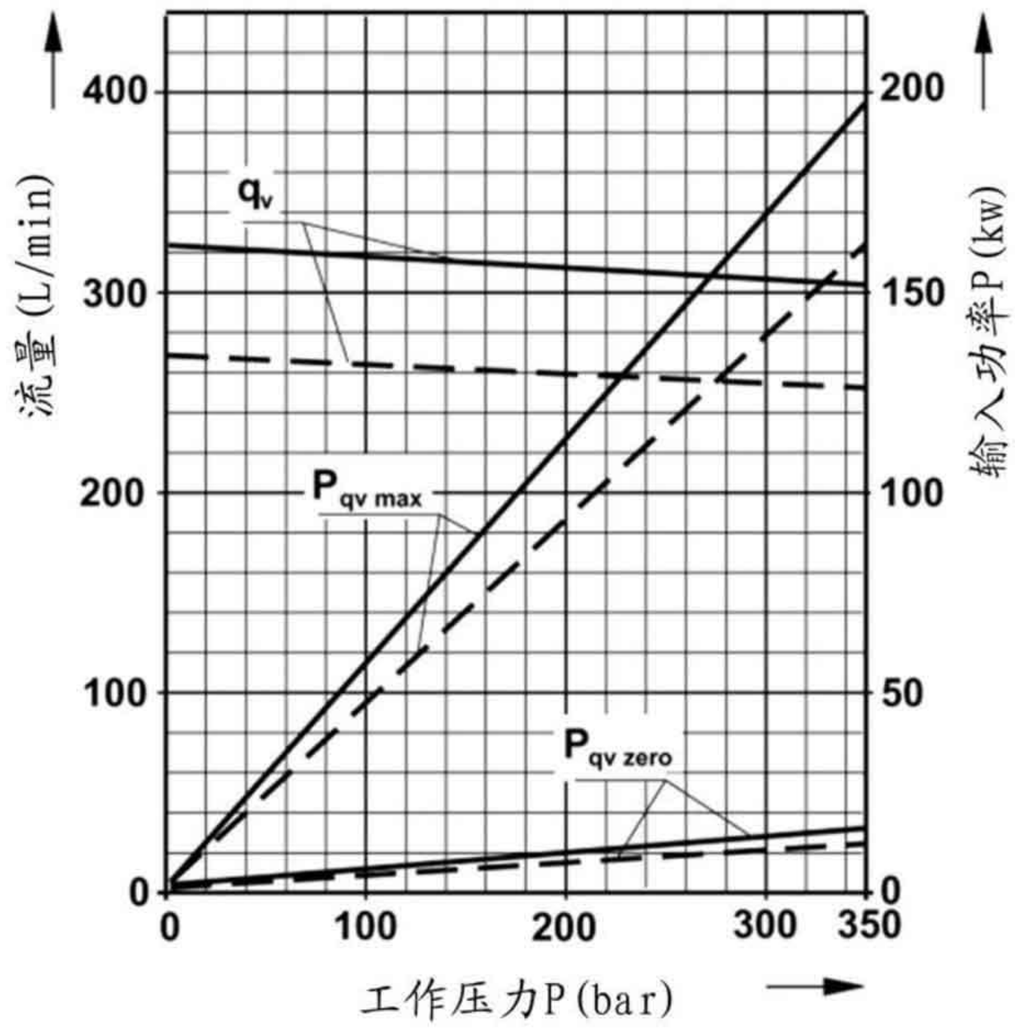

n = 2200 rpm
n = 1000 rpm

输入功率和流量

（工作液体:液压油ISO VG 46 DIN 51519，t=50℃）

总效率 $\eta_t = \frac{q_v \ p}{P_{qv\,max} \ 600}$

容积效率 $\eta_v = \frac{q_v}{q_{vtheor}}$

规格250

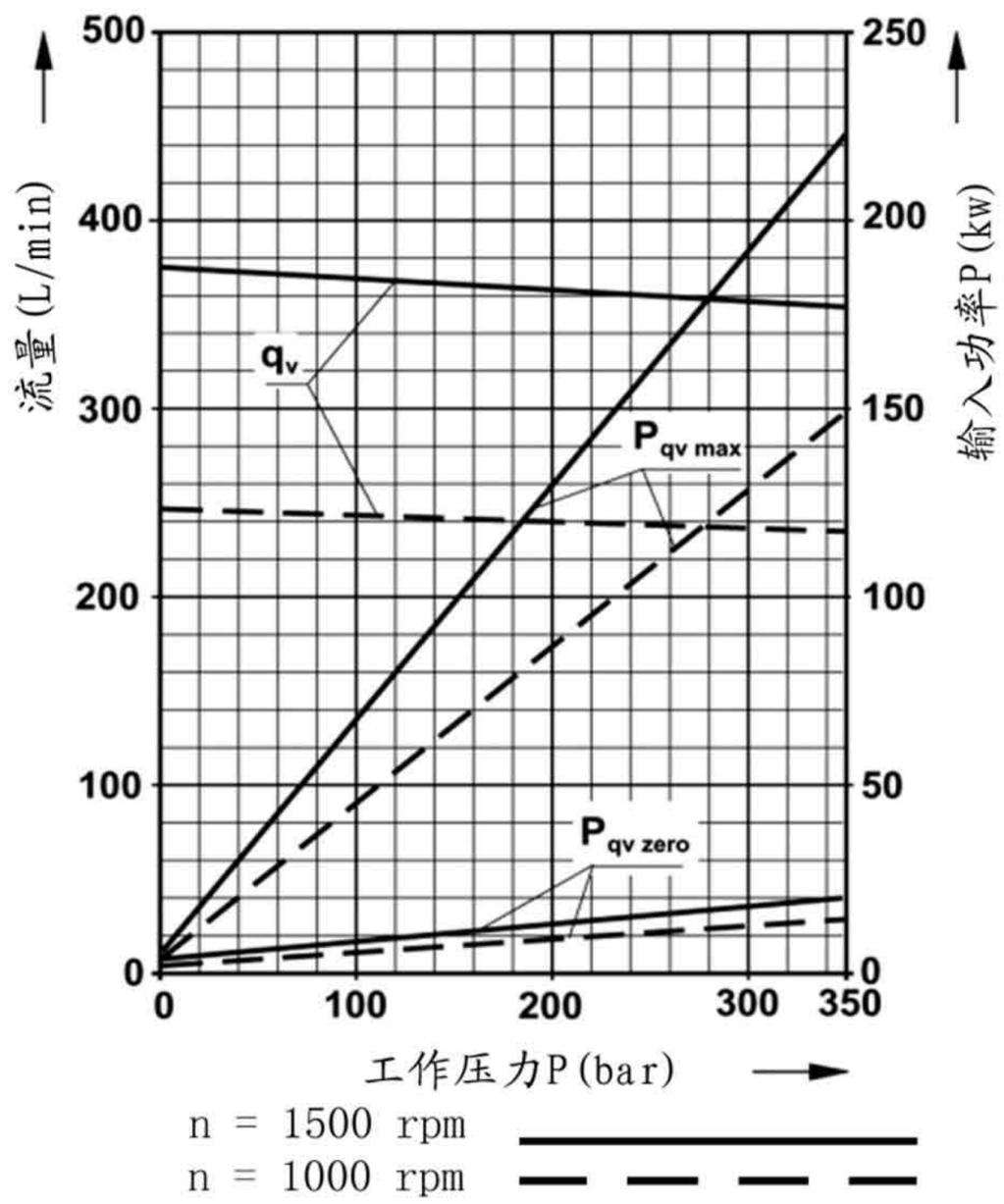

规格355

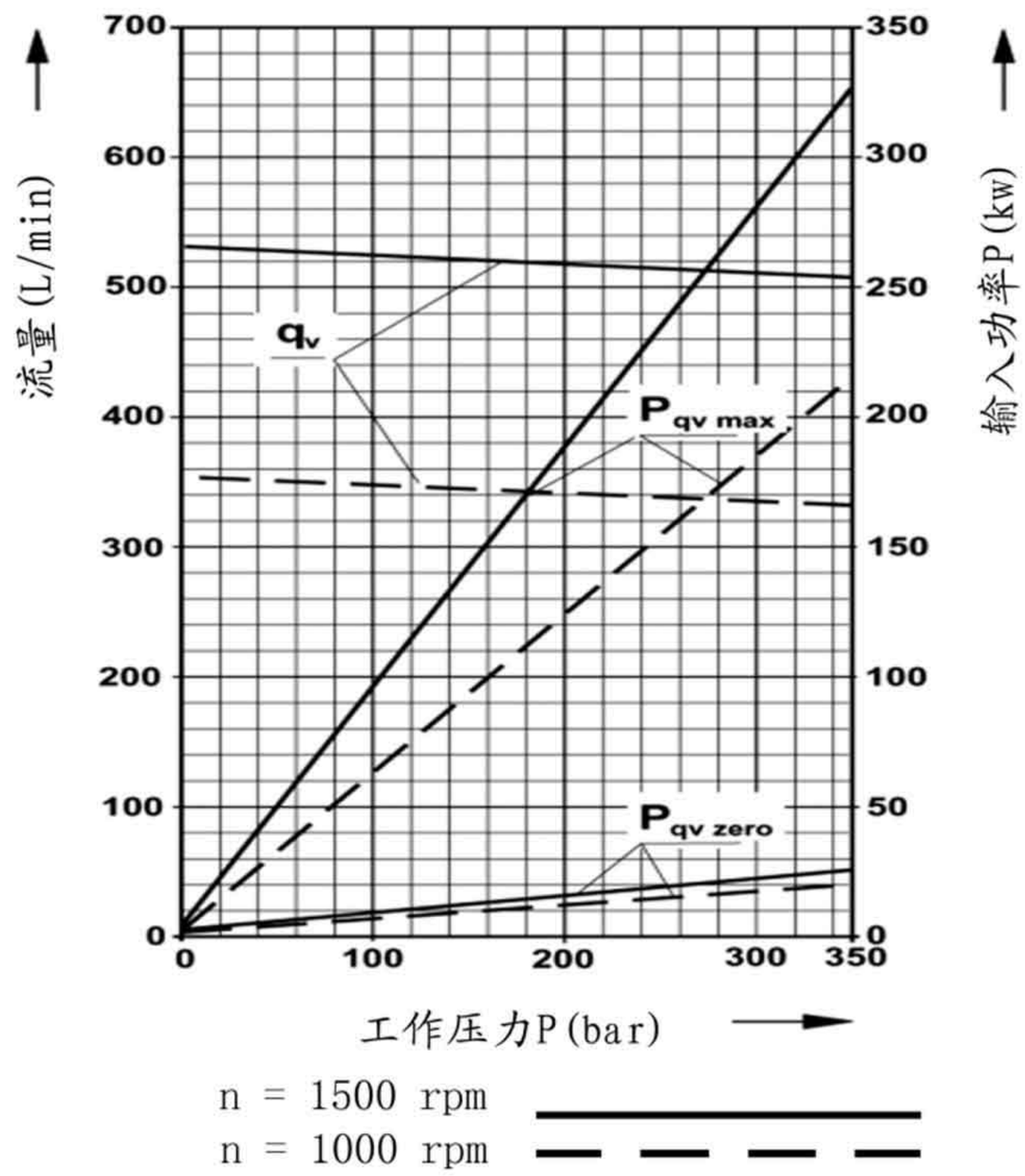

规格300

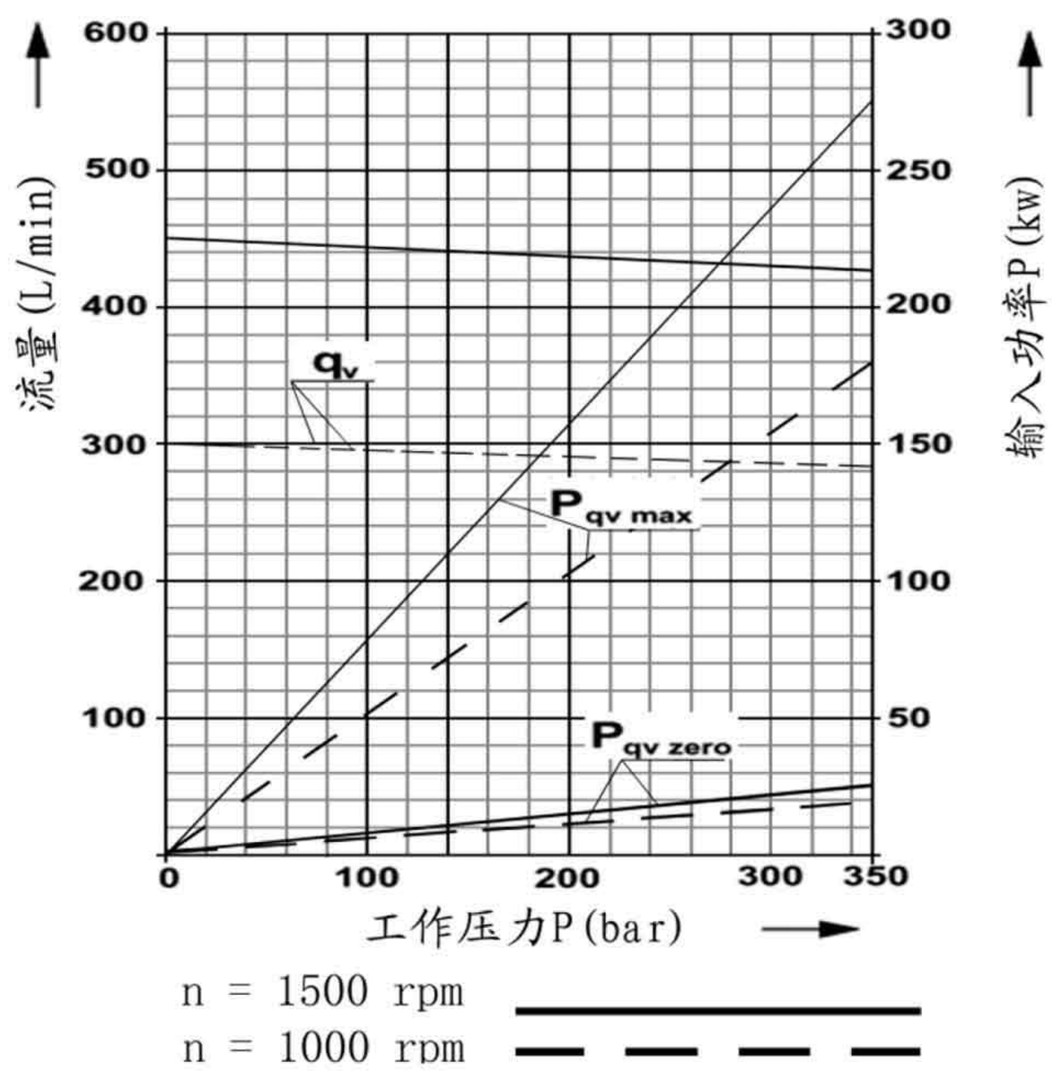

输入功率和流量

（工作液体:液压油ISO VG 46 DIN 51519，t=50℃）

总效率 $\eta_t = \frac{q_v \ p}{P_{q_v\,max} \ 600}$

容积效率 $\eta_v = \frac{q_v}{q_{vtheor}}$

规格500

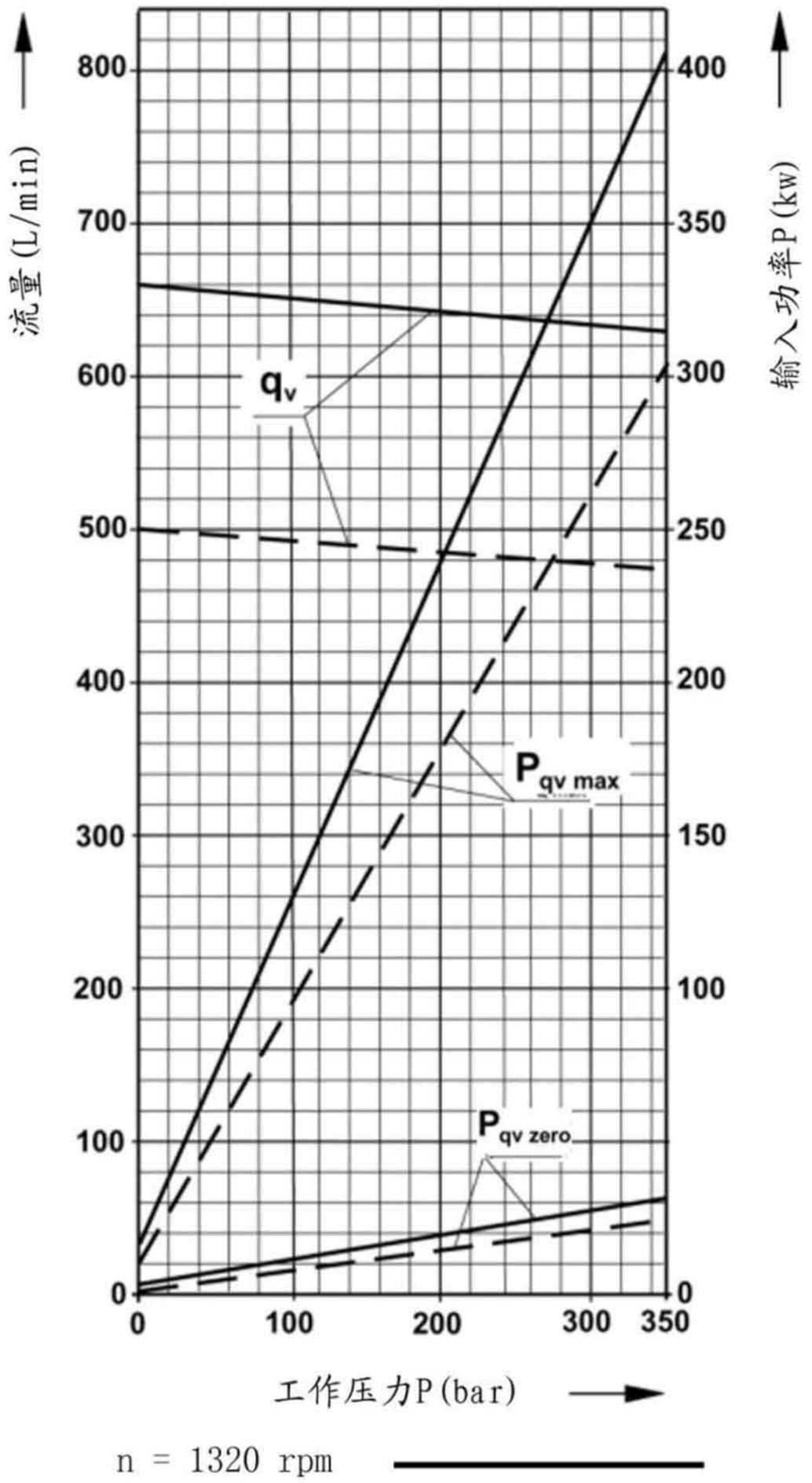

规格750

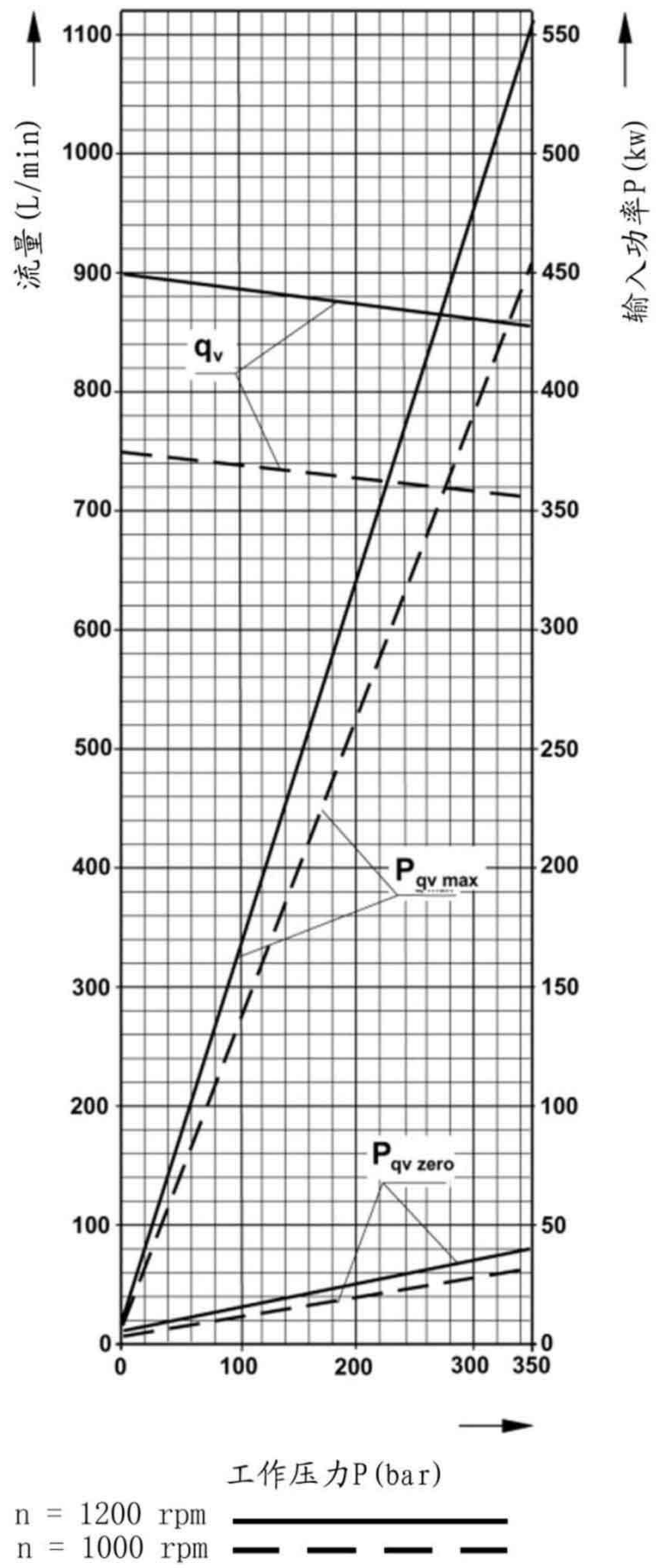

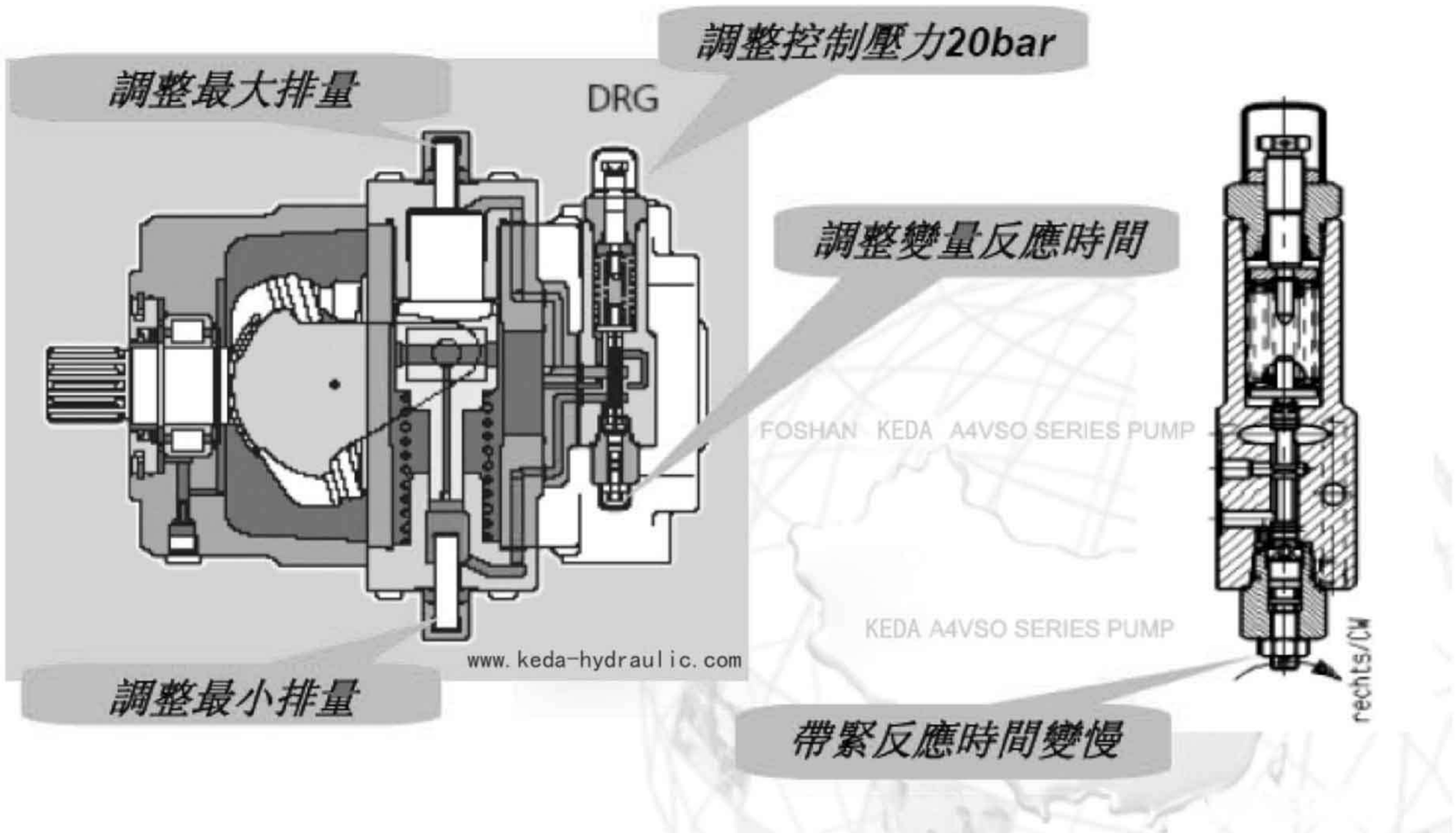

Determination of displacement

流量 (Flow) $q_v = \frac{V_g \cdot n \cdot \eta_v}{1000}$ L/r [L/min]

驱动转矩(Drive torque) $T = \frac{1.59 \cdot V_g \cdot \Delta P}{100 \cdot \eta_{mh}}$ [Nm]

驱动功率（Drive power）$P = \frac{2\pi \cdot T \cdot n}{60000} = \frac{T \cdot n}{9549} = \frac{q_v \cdot \Delta p}{600 \cdot \eta_t}$ [Kw]

V_g=排量(Displacement) [cm^3]

ΔP= 压力差(Pressure differential) [bar]

N=转速(Speed)[rpm]

η_n=容积效率(Volumetric efficiency)

η_{mh}=机械-液压效率（Mechanical/hydraulic efficiency）

η_t=总效率（Overall efficiency）（$\eta_t = \eta_v \cdot \eta_{mh}$）